# NEW CS SERIES

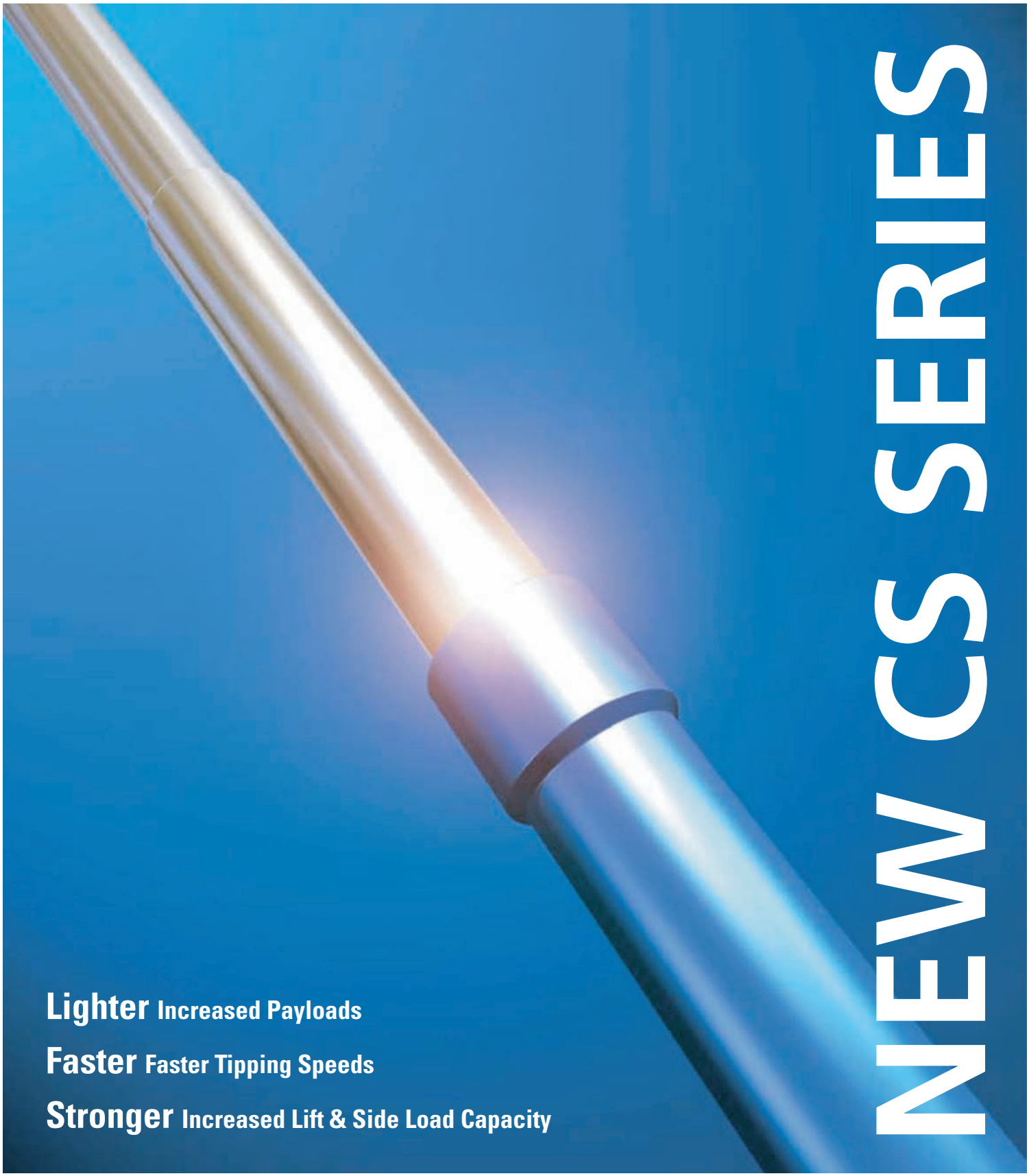

**Lighter** Increased Payloads

**Faster** Faster Tipping Speeds

**Stronger** Increased Lift & Side Load Capacity

Edbro
SETTING THE INDUSTRY STANDARD

Transpecs
QUALITY ON THE MOVE

Transport Specialties Ltd. Cnr Kerrs & Ash Roads, Wiri, PO Box 98-971, SAMC, Auckland, New Zealand. Phone: +64 09 980 7300 Fax: +64 09 980 7306
Email: sales@transpecs.co.nz Web: www.transpecs.co.nz

## PRE 2010 CS Series - Lifting Brackets & Mounting Feet


| Content: | | Page: |
|---|---|---|
| EDBRO NEW CS SERIES HOISTS FEATURES & BENEFITS | | 2-01 |
| INSTALL 01 | - CS SERIES INSTALLATION CHECKLIST | 2-03 |
| | - CS SERIES EYE TYPE INSTALLATION GUIDE | 2-04 |
| INSTALL 02 | - CS SERIES INSTALLATION CHECKLIST | 2-05 |
| OIL 01 | - OIL SPECIFICATION GUIDE | 2-06 |
| BRKT01_A | - LIFTING BRACKET OPTIONS | 2-08 |
| BRKT01_B | - TOW EYE BRACKET OPTIONS | 2-09 |
| BRKT02 | - FOOT MOUNTING BRACKETS | 2-10 |
| BRKT02 | - FOOT MOUNTING BRACKETS | 2-12 |


## Edbro New CS Series Hoists


| Part Number: | Description: | Page: |
|---|---|---|
| NCS 13OE346 | RAM 3 STAGE New CS | 2-13 |
| NCS 13OE384 | RAM 4 STAGE New CS | 2-14 |
| NCS 13OE424 | RAM 4 STAGE New CS | 2-15 |
| NCS 13OE464 | RAM 4 STAGE New CS | 2-16 |
| NCS 13OE504 | RAM 4 STAGE New CS | 2-17 |
| NCS 13OE544 | RAM 4 STAGE New CS | 2-18 |
| NCS 15OE477 | RAM 5 STAGE New CS | 2-19 |
| NCS 15OE540 | RAM 4 STAGE New CS | 2-20 |
| NCS 15OE577 | RAM 5 STAGE New CS | 2-21 |
| NCS 17OE573 | RAM 5 STAGE New CS | 2-22 |
| NCS 17OE673 | RAM 5 STAGE New CS | 2-23 |
| NCS 180E823 | RAM 5 STAGE New CS | 2-24 |

| Part Number: | Description: | Page: |
|---|---|---|
| NCS 13OO407 | RAM 5 STAGE New CS | 2-25 |
| NCS 13OO457 | RAM 5 STAGE New CS | 2-26 |
| NCS 13OO464 | RAM 4 STAGE New CS | 2-27 |
| NCS 13OO504 | RAM 4 STAGE New CS | 2-28 |
| NCS 13OO544 | RAM 4 STAGE New CS | 2-29 |
| NCS 15OO540 | RAM 4 STAGE New CS | 2-30 |
| NCS 15OO652 | RAM 5 STAGE New CS | 2-31 |
| NCS 17OO673 | RAM 5 STAGE New CS | 2-32 |




Transport Specialties Ltd. Cnr Kerrs & Ash Roads, Wiri, PO Box 98-971, SAMC, Auckland, New Zealand. Phone: +64 09 980 7300 Fax: +64 09 980 7306
Email: sales@transpecs.co.nz Web: www.transpecs.co.nz

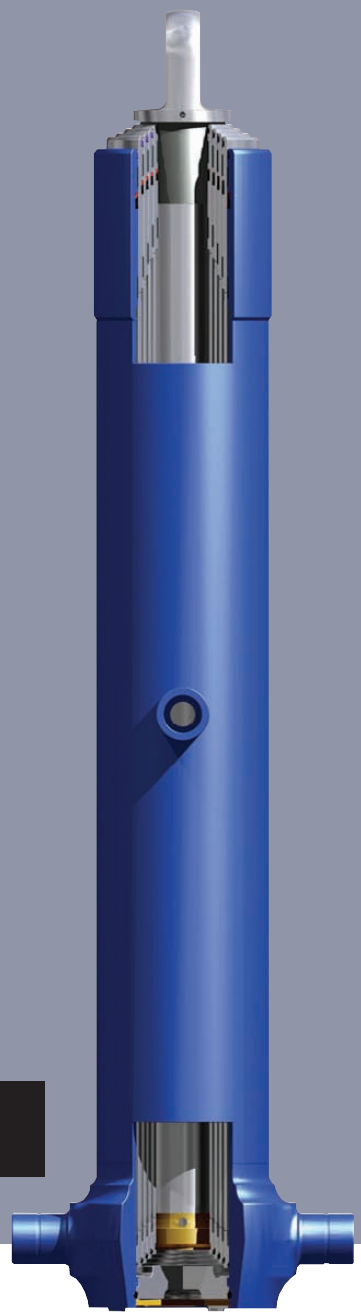

# PROFIT POWER.

## NEW EDBRO CS SERIES HOISTS

**Lighter** Increased Payloads

**Faster** Faster Tipping Speeds

**Stronger** Increased Lift & Side Load Capacity

Edbro
SETTING THE INDUSTRY STANDARD
*World Leading Since 1916.*

**48** Parts Support Locations

National Transpecs Sales & Product Support Team

World Leading Brands Proven in New Zealand

Transpecs
QUALITY ON THE MOVE

Transport Specialties Ltd. Cnr Kerrs & Ash Roads, Wiri, PO Box 98-971, SAMC, Auckland, New Zealand. Phone: +64 09 980 7300 Fax: +64 09 980 7306
Email: sales@transpecs.co.nz Web: www.transpecs.co.nz

## Benefits

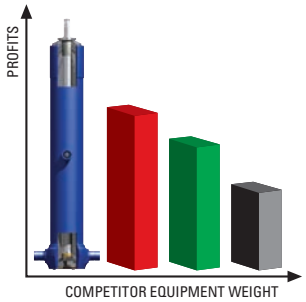


### Lighter
**Increased Payloads**
The world's lightest tipping cylinders providing increased payload and so increased operating profits.

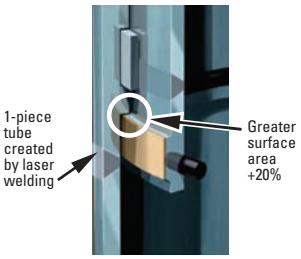


### Faster
**Faster Tipping Speeds**
One-piece tube construction and increased tube contact faces allow faster tipping speeds.

### Stronger
**Increased Lift & Side Load Capacity**
Advanced design and production engineering techniques, including laser welding, provide increased lift capacity and side load resistance. Base tube head section increased by as much as 53%.

## Features

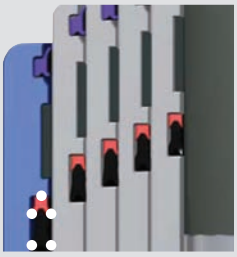

Double lip wiper seal ensures efficient lubrication of each tube and prevents contamination of the cylinder.

Unique 5 point sealing system reduced friction for years of smooth, trouble-free operation.

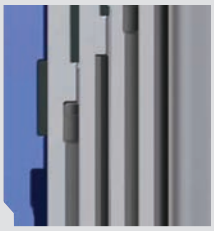

Wear rings from non-metallic acetal material provice low friction and long service life.

One-piece tubes with large stop contact faces provide optimum durability for long life and reduced maintenance.

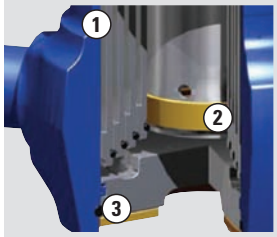


1. Friction welded tube assembly increases strength and fatigue life.
2. Brass slider reduces risk of soaring and damage due to side load.
3. Unique clip and seal arrangement provide long life and ensures easy servicing.

Edbro
SETTING THE INDUSTRY STANDARD

**48** Parts Support Locations

National Transpecs Sales & Product Support Team

World Leading Brands Proven in New Zealand

Transpecs
QUALITY ON THE MOVE

Transport Specialties Ltd. Cnr Kerrs & Ash Roads, Wiri, PO Box 98-971, SAMC, Auckland, New Zealand. Phone: +64 09 980 7300 Fax: +64 09 980 7306
Email: sales@transpecs.co.nz Web: www.transpecs.co.nz

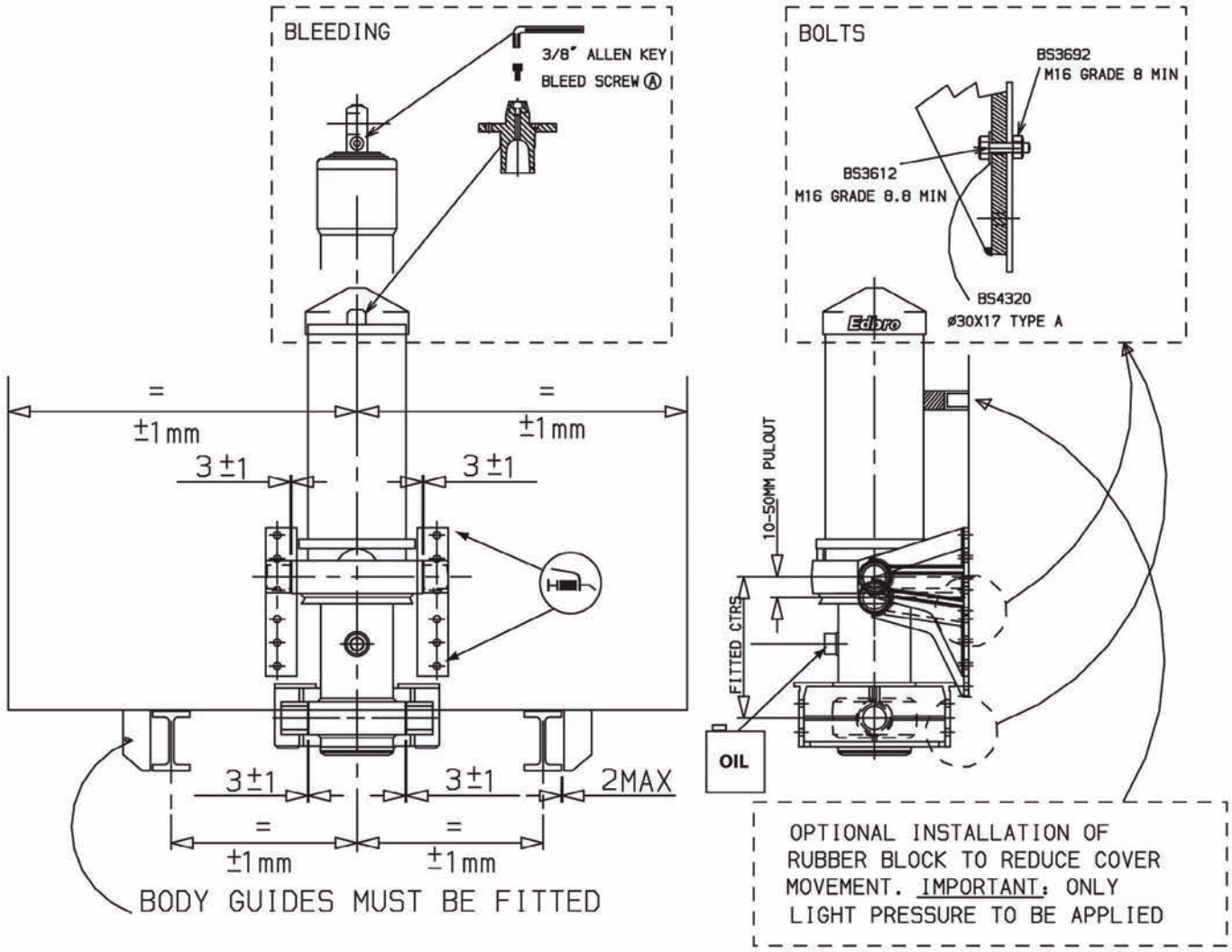


**Pressure** (Refer to cylinder serial number plate)

Set pressure relief valve to working pressure (1).

**Cylinder Bleeding Procedure**

- Lift body approx 300 mm
- Loosen bleed screw (A)
- ⚠ **Take care!** Body will lower
- Allow air to escape
- Tighen when oil flows
- Lift body to full tip
- Lower & repeat

**Recommended Torques**

| | Grade 8.8 | Grade 10.9 |
|---|---|---|
| M10 | 56Nm | 77Nm |
| M12 | 98Nm | 134Nm |
| M16 | 240Nm | 332Nm |

*Retorque all bolts monthly*

**Oil/Grease**

OIL **Oil Port**

**Grease** (1/8" BSP)

*See oil specification OIL01*

Edbro
SETTING THE INDUSTRY STANDARD

Transpecs
QUALITY ON THE MOVE


Transport Specialties Ltd. Cnr Kerrs & Ash Roads, Wiri, PO Box 98-971, SAMC, Auckland, New Zealand. Phone: +64 09 980 7300 Fax: +64 09 980 7306
Email: sales@transpecs.co.nz Web: www.transpecs.co.nz

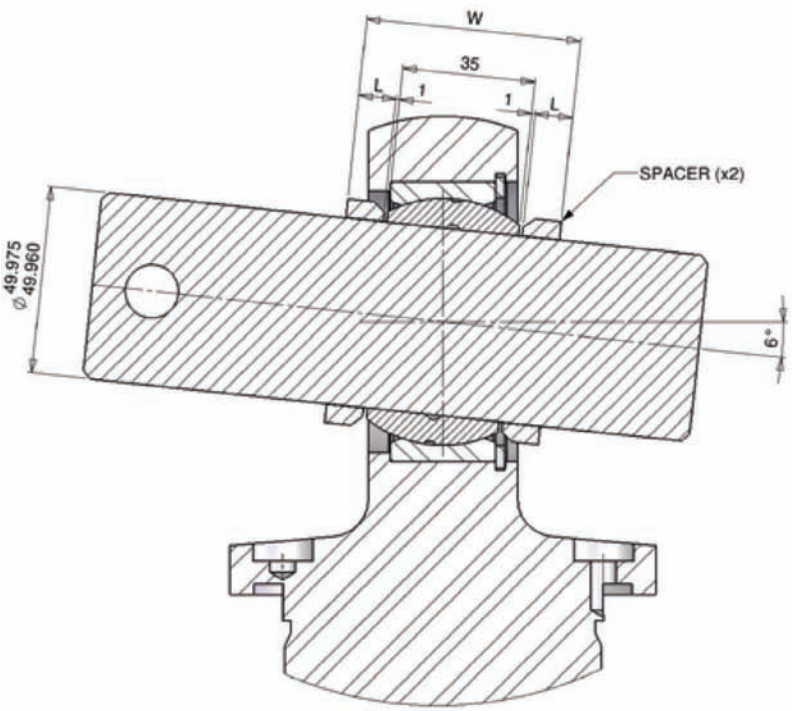


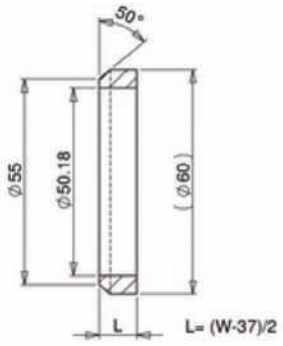


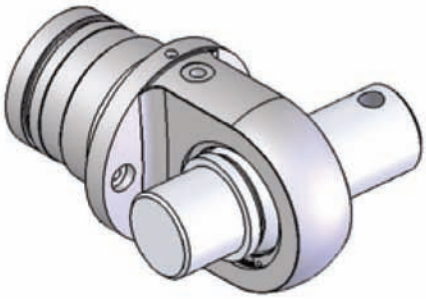

WHERE W = BRACKET WIDTH

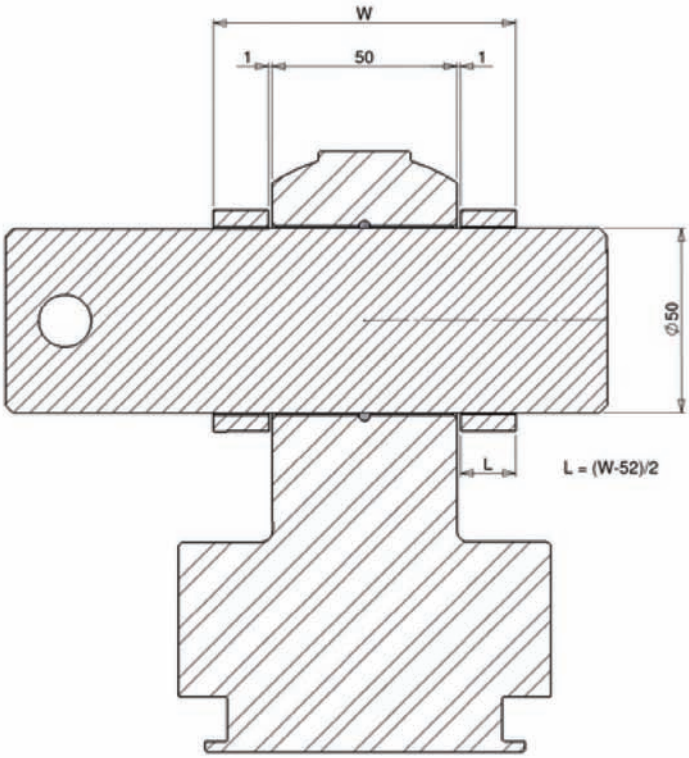


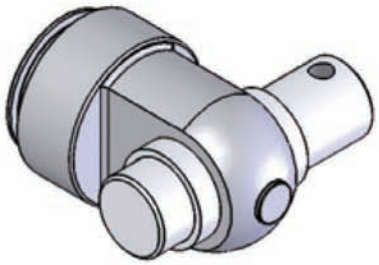

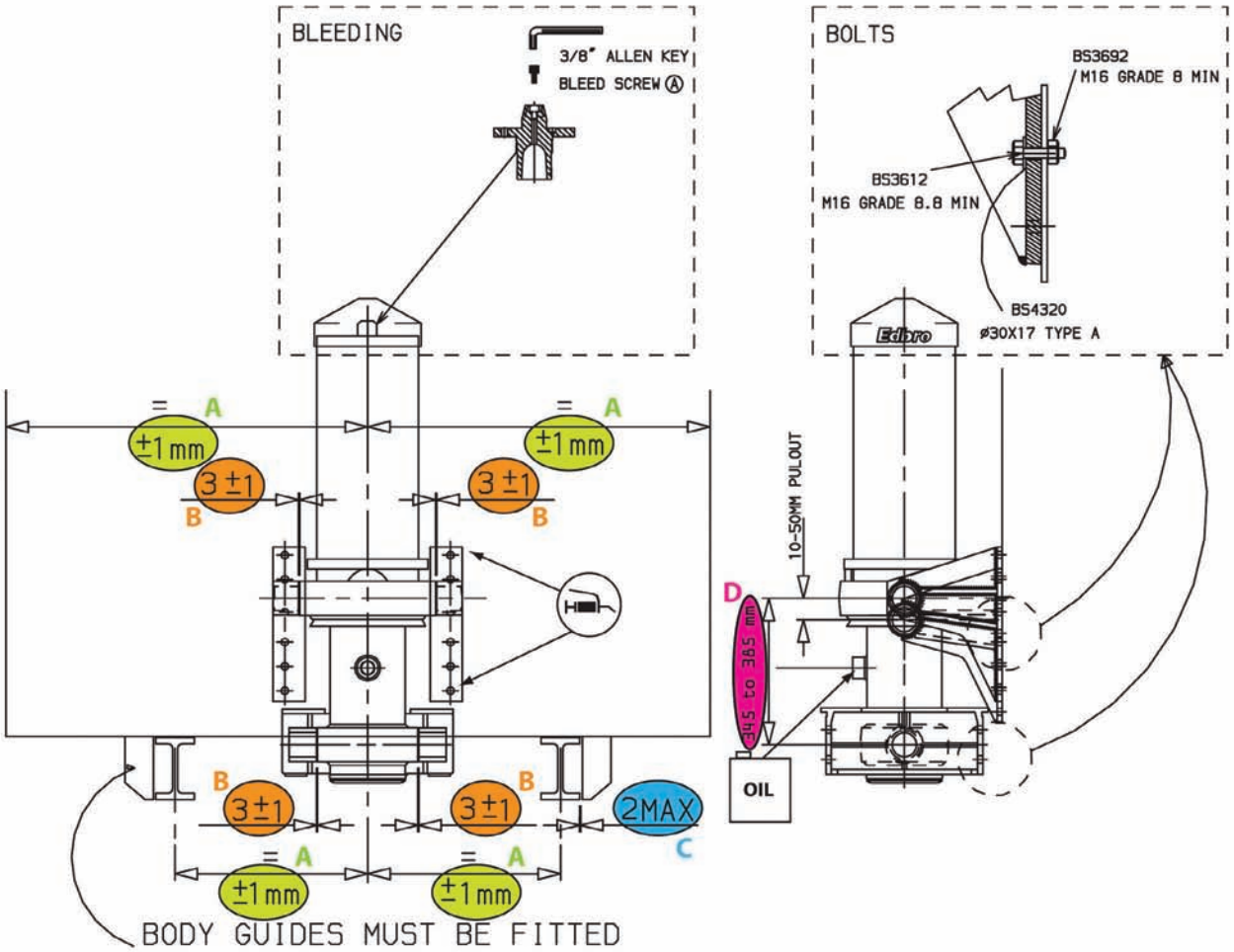


### INSTALLATION CHECK LIST

- **A.** Check cylinder alignment ☐
- **B.** Check bracket clearances ☐
- **C.** Check body guide clearances ☐
- **D.** Check cylinder mounting pin centres ☐
- **E.** Check bolt torques ☐
- **F.** Confirm no oil leaks ☐
- **G.** Air bleeding done ☐

### Cylinder Bleeding Procedure

* Lift body approx 300 mm
* Loosen bleed screw (A)
* ⚠ **Take care!** Body will lower
* Allow air to escape
* Tighen when oil flows
* Lift body to full tip
* Lower & repeat

### Recommended Torques

| | Grade 8.8 | Grade 10.9 |
|---|---|---|
| M10 | 56Nm | 77Nm |
| M12 | 98Nm | 134Nm |
| M16 | 240Nm | 332Nm |

*Retorque all bolts monthly*

### Oil/Grease

OIL **Oil Port**

**Grease** (1/8" BSP)

*See oil specification OIL01*




Transport Specialties Ltd. Cnr Kerrs & Ash Roads, Wiri, PO Box 98-971, SAMC, Auckland, New Zealand. Phone: +64 09 980 7300 Fax: +64 09 980 7306
Email: sales@transpecs.co.nz Web: www.transpecs.co.nz

Oils specified to suit environmental temperature conditions. Use the colour coding below to identify the recommend manufacturer oil.

| Environmental conditions | Extreme Cold | Cold | Winter to Summer | Hot | Very Hot |
|---|---|---|---|---|---|
| | To -40ºC | -5 to -25ºC | -5 to 30ºC | 30 to 50ºC | Over 50ºC |
| ISO grade | N/A | 15 | 32 | 46 | 68 |

## MINERAL OIL

To be specified according to ISO 6743/4 HLP-HM or DIN 51524 (part 2) with ISO viscosity grade according to the chart above.

| Mineral Oil | | | | | | | |
|---|---|---|---|---|---|---|---|
| | | Oil Specification | | | | | Grease Specification |
| Manufacturer | Mobil | Aero HFA | DTE11M | DTE24 | DTE25 | DTE26 | XHP222 |
| | Shell | AeroShell 4 | Tellus T15 | Tellus 32 | Tellus 46 | Tellus 68 | Retinax EP |
| | BP | *Not available* | Bartran HV15 | Bartran HV32 | Bartran HV46 | Bartran HV68 | Energrease LS EP2 |
| | Gulf | *Not available* | Hydrasil 10 | Hydrasil 32 | Hydrasil 46 | Hydrasil 68 | Gulfcrown EP no2 |

## ENVIRONMENTALLY FRIENDLY OIL

To be specificed according to ISO 15380 type HEES with equivalent specification to the mineral oils above.

| Environmentally Friendly Oil | | | | | | | |
|---|---|---|---|---|---|---|---|
| | | Oil Specification | | | | | Grease Specification |
| Manufacturer | Mobil | *Not available* | *Not available* | EAL 32 | EAL 46 | *Not available* | EAL 102 |
| | Shell | *Not available* | HF – E 15 | HF – E 32 | HF – E 46 | HF – E 68 | Naturelle EP2 |
| | BP | *Not available* | *Not available* | Biohyd SE-S 32 | Biohyd SE-S-46 | Biohyd SE-S 68 | Biotac EP 2 |
| | Gulf | *Not available* | *Not available* | Biosynth VG 32 | Biosynth VG 46 | *Not available* | Biocal 2 |

***Notes:***
*1. Maximum running (under load) viscosity is 700 Cst*
*2. Minimum running (under load) viscosity is 10 Cst (efficiency may be reduced)*
*3. Oil cleanliness must to maintained to ISO 4406 class 19/16*
*4. It is recommended that oil should be replaced annually*

*Technical specifications are subject to change without notice.*


Transport Specialties Ltd. Cnr Kerrs & Ash Roads, Wiri, PO Box 98-971, SAMC, Auckland, New Zealand. Phone: +64 09 980 7300 Fax: +64 09 980 7306
Email: sales@transpecs.co.nz Web: www.transpecs.co.nz

*For use with outer cover cylinders (00 type)*

**LB100-LH & LB101-RH**

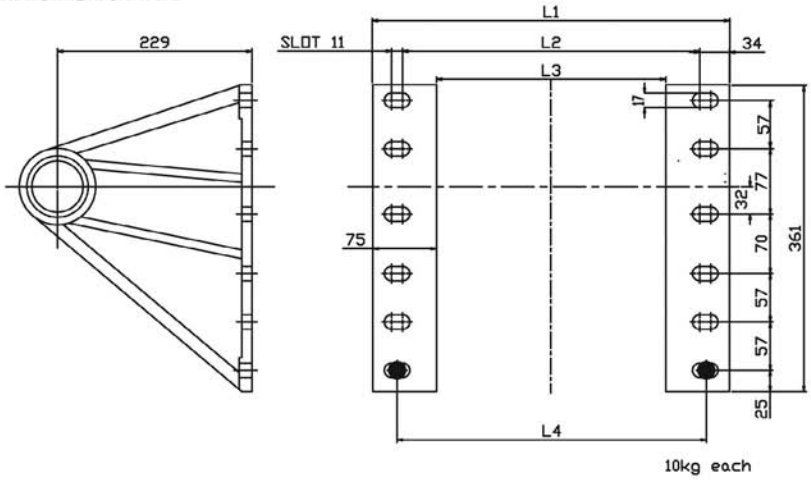


| | CS15 | CS17/18 |
|---|---|---|
| L1 | 456 | 468 |
| L2 | 388 | 400 |
| L3 | 306 | 318 |
| L4 | 388 | 400 |

**LB104-LH & LB105-RH**

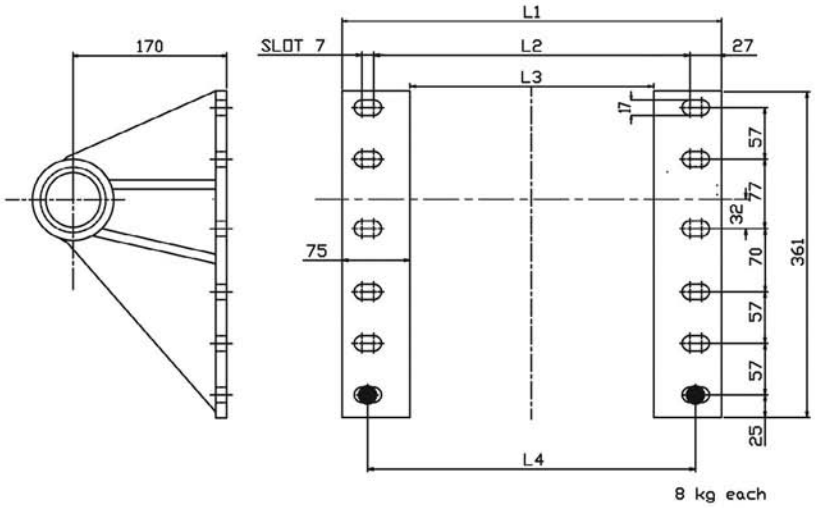


| | CS15 | CS17/18 |
|---|---|---|
| L1 | 442 | 454 |
| L2 | 388 | 400 |
| L3 | 292 | 304 |
| L4 | 388 | 400 |

**LB106-LH & LB107-RH**

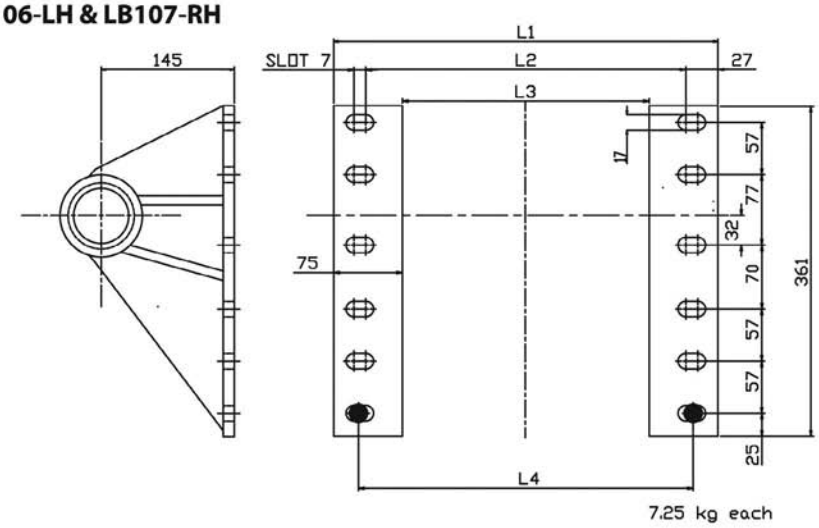


| | CS15 | CS17/18 |
|---|---|---|
| L1 | 442 | 454 |
| L2 | 388 | 400 |
| L3 | 292 | 304 |
| L4 | 388 | 400 |

*All dimensions are given in mm unless otherwise stated. Technical specifications are subject to change without notice.*

**LB108-LH & LB109-RH**

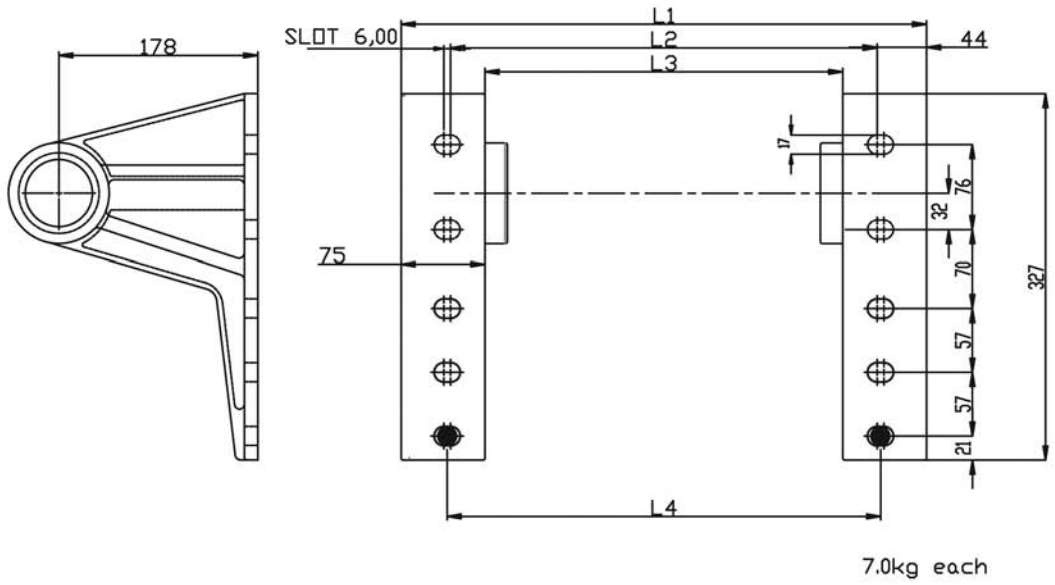


| | CS13 |
|---|---|
| L1 | 470 |
| L2 | 381 |
| L3 | 320 |
| L4 | 387 |

*All dimensions are given in mm unless otherwise stated. Technical specifications are subject to change without notice.*



Transport Specialties Ltd. Cnr Kerrs & Ash Roads, Wiri, PO Box 98-971, SAMC, Auckland, New Zealand. Phone: +64 09 980 7300 Fax: +64 09 980 7306
Email: sales@transpecs.co.nz Web: www.transpecs.co.nz

## PLAIN EYE INC BUSH

*For use with all OE types*

**0MK1**

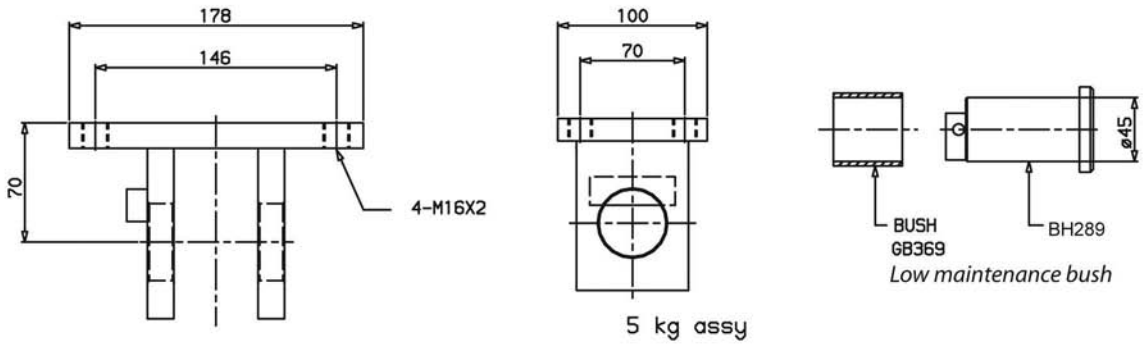


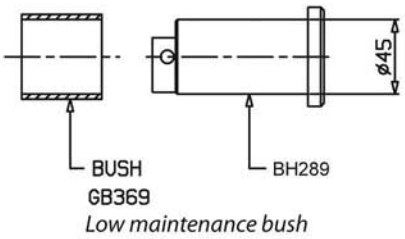


*All dimensions are given in mm unless otherwise stated. Technical specifications are subject to change without notice.*



Transport Specialties Ltd. Cnr Kerrs & Ash Roads, Wiri, PO Box 98-971, SAMC, Auckland, New Zealand. Phone: +64 09 980 7300 Fax: +64 09 980 7306
Email: sales@transpecs.co.nz Web: www.transpecs.co.nz

## CS17 & CS18 cylinders

### 18070B60

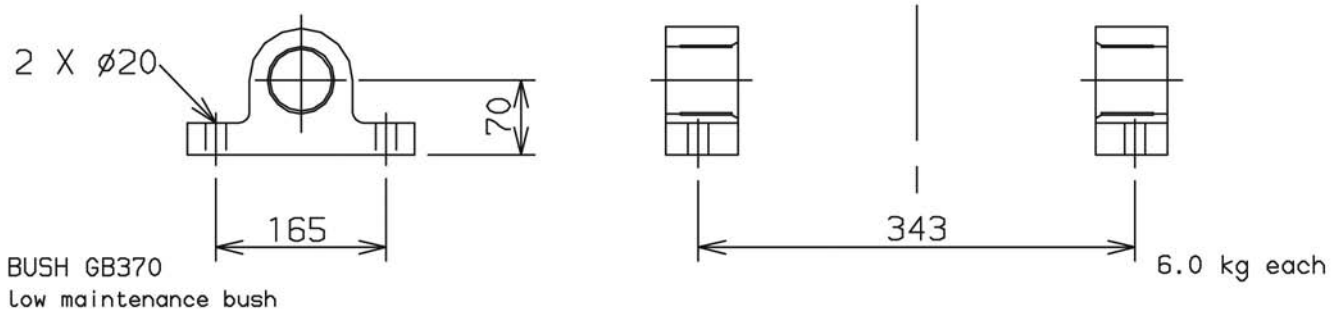


### 18150B60

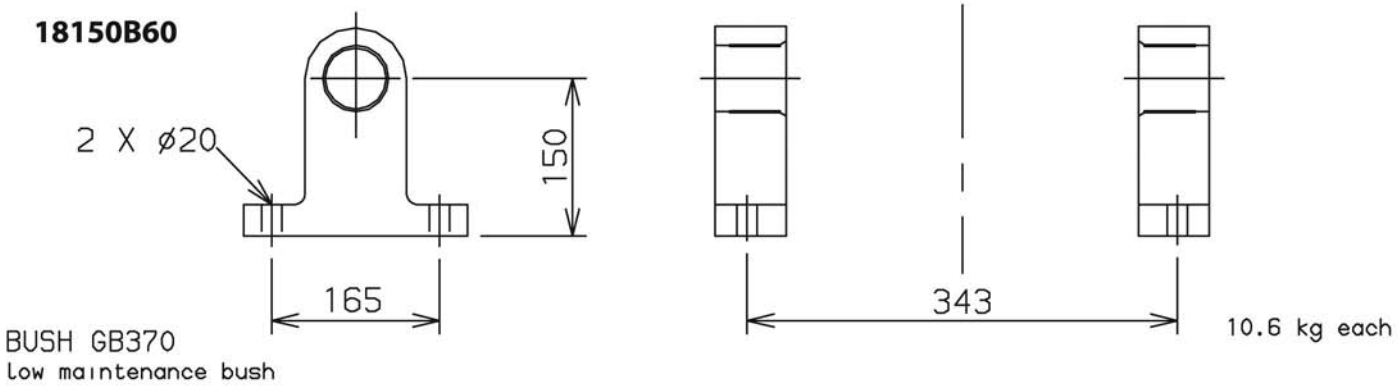


*All dimensions are given in mm unless otherwise stated. Technical specifications are subject to change without notice.*


Transport Specialties Ltd. Cnr Kerrs & Ash Roads, Wiri, PO Box 98-971, SAMC, Auckland, New Zealand. Phone: +64 09 980 7300 Fax: +64 09 980 7306
Email: sales@transpecs.co.nz Web: www.transpecs.co.nz

## CS15 cylinders

### 15150B60

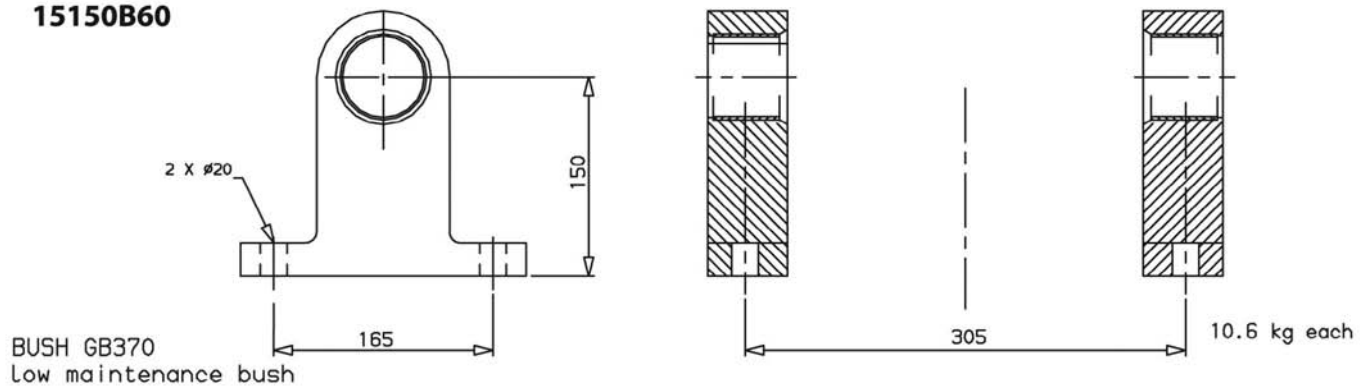


### 15063B60

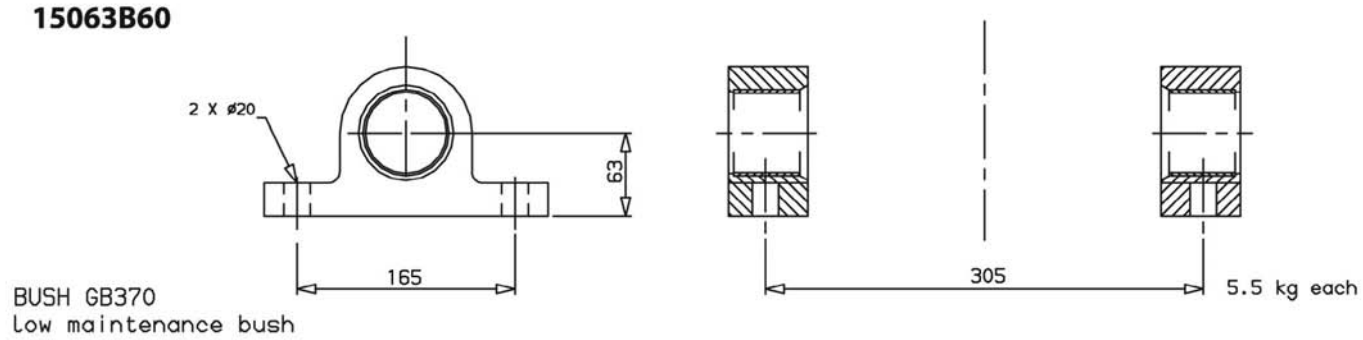


### 15125B60

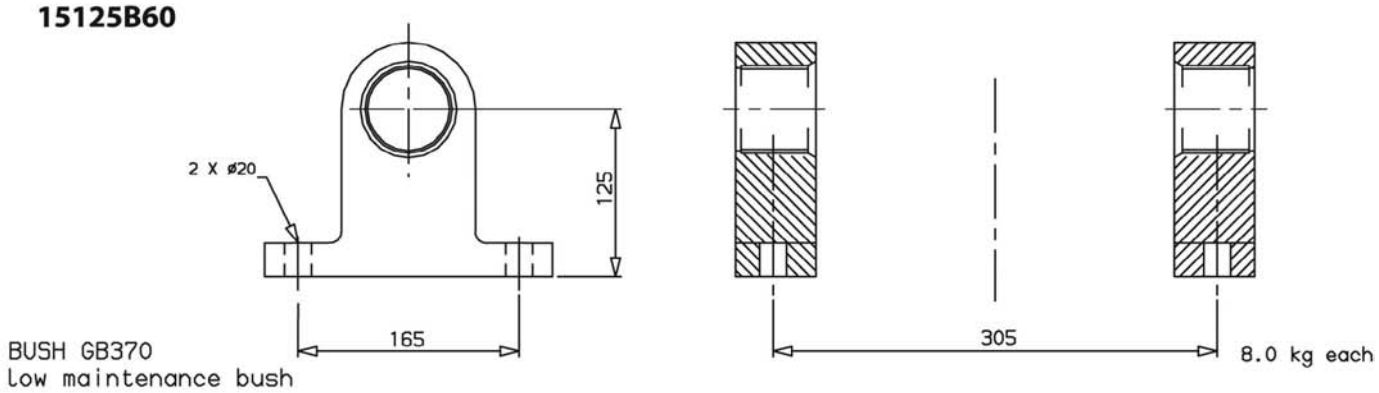


*All dimensions are given in mm unless otherwise stated. Technical specifications are subject to change without notice.*


Transport Specialties Ltd. Cnr Kerrs & Ash Roads, Wiri, PO Box 98-971, SAMC, Auckland, New Zealand. Phone: +64 09 980 7300 Fax: +64 09 980 7306
Email: sales@transpecs.co.nz Web: www.transpecs.co.nz

## CS13 cylinders

### 13110B60

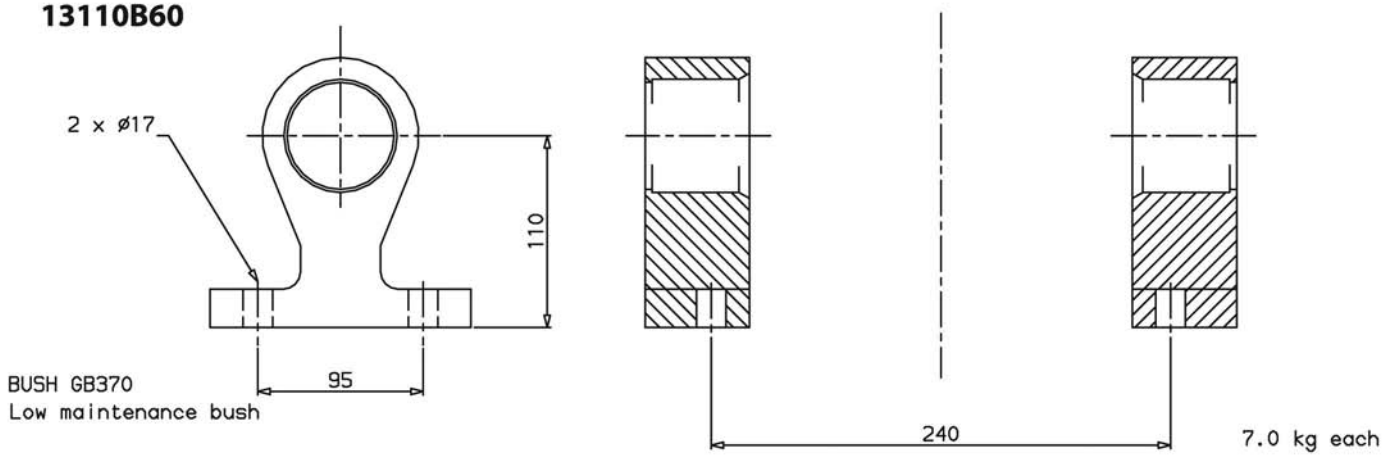


*All dimensions are given in mm unless otherwise stated. Technical specifications are subject to change without notice.*



Transport Specialties Ltd. Cnr Kerrs & Ash Roads, Wiri, PO Box 98-971, SAMC, Auckland, New Zealand. Phone: +64 09 980 7300 Fax: +64 09 980 7306
Email: sales@transpecs.co.nz Web: www.transpecs.co.nz

# Cylinder 3 stage front end with plain eye

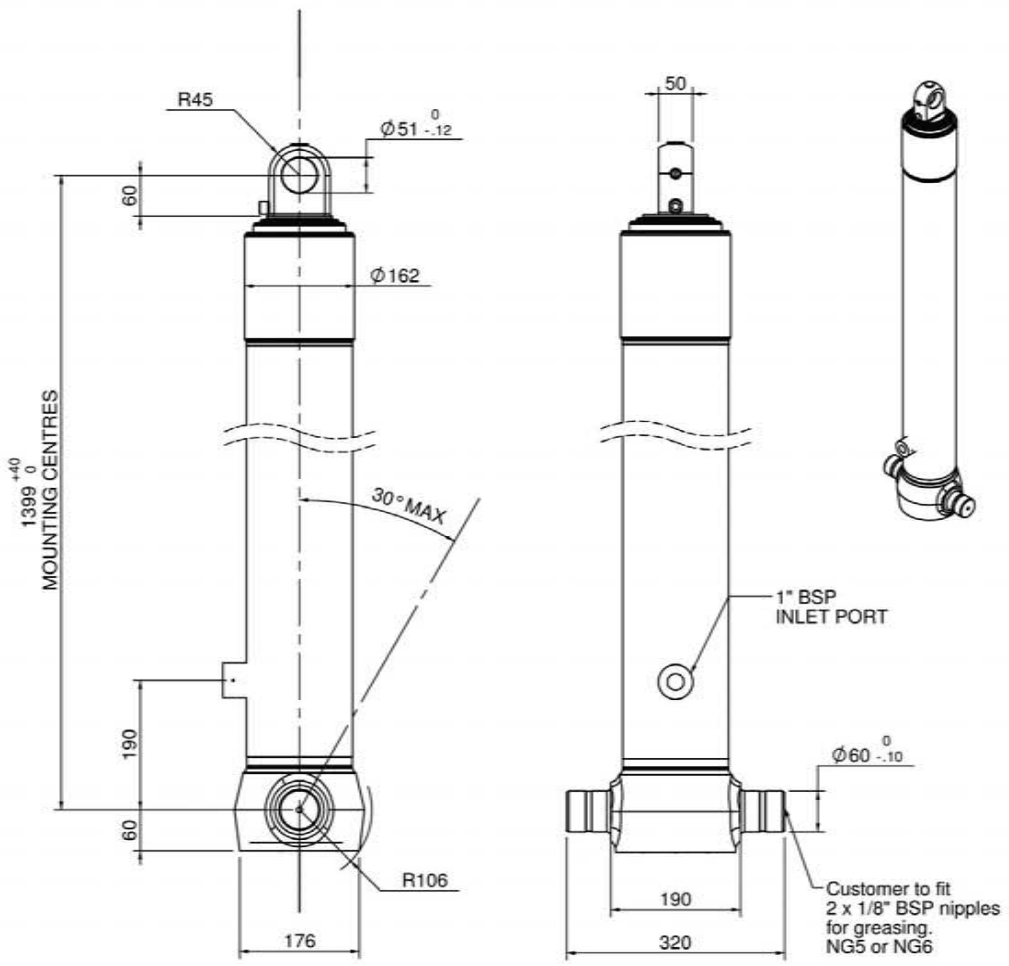


***Include 9mm Pull Out**
**All Stages Chrome Plated**

# NCS13OE346

| Stage | Diameter | Length | Stroke | Swept Volume |
|---|---|---|---|---|
| - | - | - | - | - |
| - | - | - | - | - |
| - | - | - | - | - |
| 0 | 155 | 1375 | - | - |
| 1 | 136 | 1340 | 1138 | 17 |
| 2 | 117 | 1340 | 1162 | 12 |
| 3 | 98 | 1340 | 1167 | 9 |
| Final stroke reduced by | 0 | Total (+5/-10) | 3467 | 38 |
| Cylinder Mass (Kg) | 112.64 | Priming Volume | | 12.8 |
| Rated Pressure (Bar) | 135 | Total Volume (Litres) | | 50.8 |
| Maximum Pressure (Bar) | 175 | Max. first stage thrust | | 200 KN |

d = 0 ; r = 750

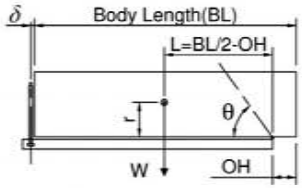


| BODY LENGTH (BL) | | | | | | OH |
|---|---|---|---|---|---|---|
| 4600 | | 4800 | | 5000 | | |
| 30 | 47° | 29 | 45° | 28 | 43° | 150 |
| 36 | 51° | 34 | 48° | 33 | 46° | 450 |
| 47 | 55° | 43 | 52° | 39 | 50° | 750 |

Tipping angle (θ)
Body + payload mass,W (tonne)

**For guidance only;**
Higher Rated Pressures may be possible. To check your application, email Edbro plc at <applications@edbro.co.uk>

- If hydraulic pressure is used to limit overloading, the system relief valve must be set to the Rated Pressure unless agreed otherwise by Edbro
- The system relief valve can be set to Maximum Pressure if the load is limited by other means.See RATINGS page for advice
- This cylinder is for lifting purposes only and sideload conditions must be avoided
- Cylinder is painted in primer paint to RAL5013
- See bracket options page BRKT01, BRKT02
- See installation instructions INSTALL01
- Use oil according to specification OIL01

Edbro SETTING THE INDUSTRY STANDARD
Transpecs QUALITY ON THE MOVE

Technical Specifications are subject to change without notice
Date Created/Updated: 22 December 2009 14:36:33
Refer www.edbro.com to confirm latest specification
All dimensions are in 'mm', unless otherwise stated

# Cylinder 4 stage front end with plain eye

## NCS13OE384

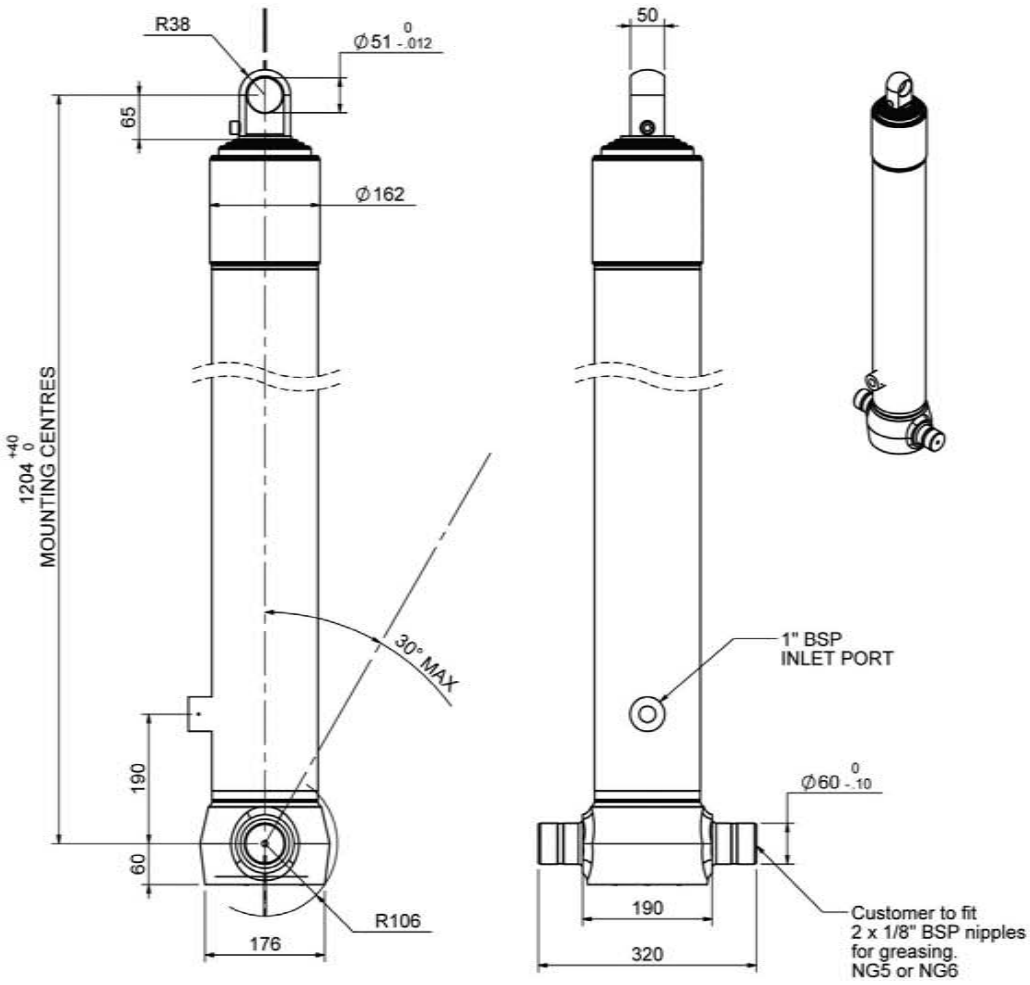


***Include 9mm Pull Out**
**All Stages Fully Chromed**

| SPECIFICATION | | RATED CAPACITY : 25-42 TONNES*** | | |
|---|---|---|---|---|
| Stage | Diameter | Length | Stroke | Swept Volume |
| - | - | - | - | - |
| - | - | - | - | - |
| 0 | 155 | 1175 | - | - |
| 1 | 136 | 1140 | 938 | 14 |
| 2 | 117 | 1140 | 962 | 10 |
| 3 | 98 | 1140 | 967 | 7 |
| 4 | 79 | 1140 | 972 | 5 |
| Final stroke reduced by | 0 | Total (+5/-10) | 3839 | 36 |
| Cylinder Mass (Kg) | 111.08 | Priming Volume | | 10.7 |
| Rated Pressure (Bar) | 175 | Total Volume (Litres) | | 46.7 |
| Maximum Pressure (Bar) | 175 | Max. first stage thrust | | 200 KN |

*****TIPPING CAPACITY AT RATED PRESSURE**

d = 0 ; r = 750

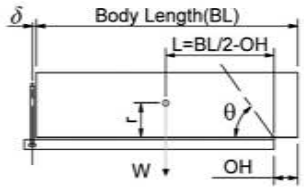


| BODY LENGTH (BL) | | | | | | OH |
|---|---|---|---|---|---|---|
| 5000 | | 5250 | | 5500 | | |
| 27 | 48° | 26 | 45° | 25 | 43° | 150 |
| 33 | 51° | 30 | 48° | 28 | 46° | 450 |
| 42 | 55° | 37 | 51° | 34 | 49° | 750 |

Tipping angle (θ)
Body + payload mass,W (tonne)

**For guidance only;**
Higher Rated Pressures may be possible. To check your application, email Edbro plc at <applications@edbro.co.uk>

**NOTES**

- If hydraulic pressure is used to limit overloading, the system relief valve must be set to the Rated Pressure unless agreed otherwise by Edbro
- The system relief valve can be set to Maximum Pressure if the load is limited by other means.See RATINGS page for advice
- This cylinder is for lifting purposes only and sideload conditions must be avoided
- Cylinder is painted in primer paint to RAL5013
- See bracket options page BRKT01, BRKT02
- See installation instructions INSTALL01
- Use oil according to specification OIL01

Edbro SETTING THE INDUSTRY STANDARD
Transpecs QUALITY ON THE MOVE

Technical Specifications are subject to change without notice
Date Created/Updated: 16 July 2010 09:53:55
Refer www.edbro.com to confirm latest specification
All dimensions are in 'mm', unless otherwise stated

# Cylinder 4 stage front end with plain eye

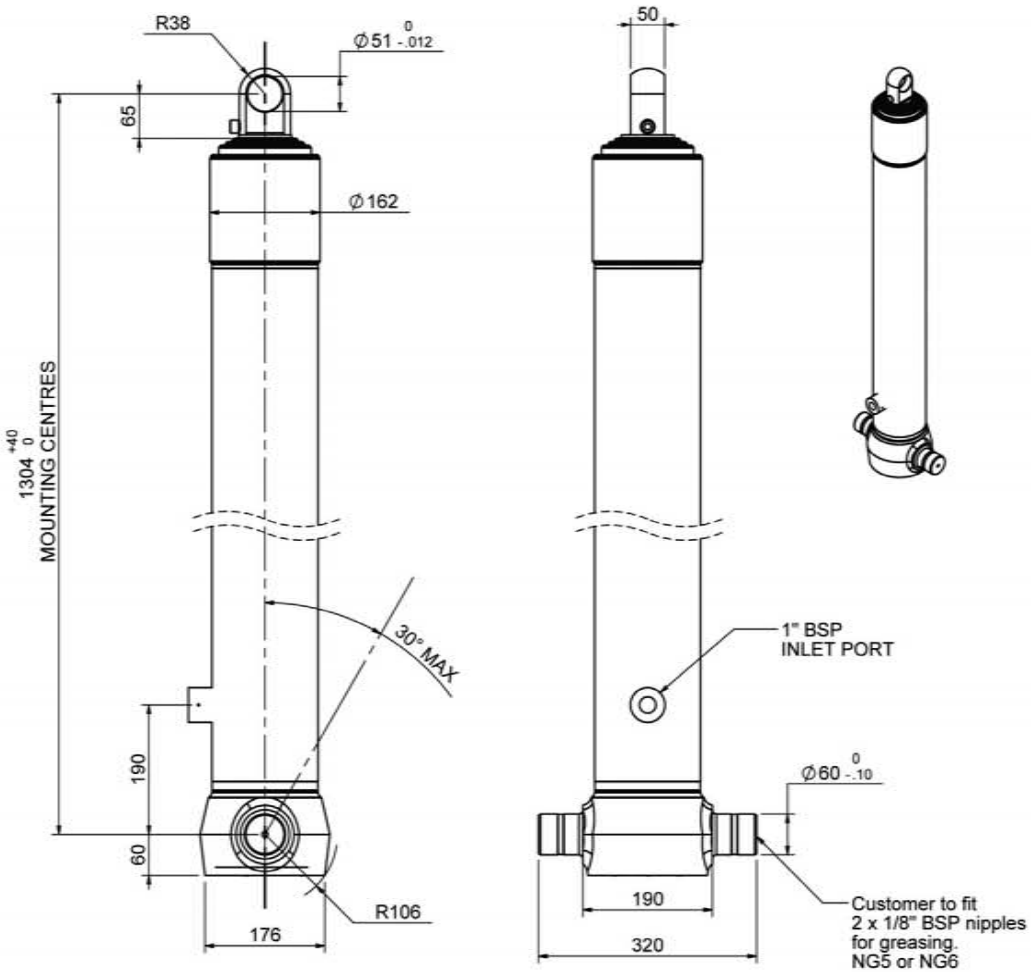


***Include 9mm Pull Out**
**All Stages Fully Chromed**

# NCS13OE424

| SPECIFICATION | | RATED CAPACITY : 24-38 TONNES*** | | |
|---|---|---|---|---|
| Stage | Diameter | Length | Stroke | Swept Volume |
| - | - | - | - | - |
| - | - | - | - | - |
| 0 | 155 | 1275 | - | - |
| 1 | 136 | 1240 | 1038 | 15 |
| 2 | 117 | 1240 | 1062 | 11 |
| 3 | 98 | 1240 | 1067 | 8 |
| 4 | 79 | 1240 | 1072 | 5 |
| Final stroke reduced by | 0 | Total (+5/-10) | 4239 | 39 |
| Cylinder Mass (Kg) | 111.08 | Priming Volume | | 10.7 |
| Rated Pressure (Bar) | 175 | Total Volume (Litres) | | 49.7 |
| Maximum Pressure (Bar) | 175 | Max. first stage thrust | | 200 KN |

*****TIPPING CAPACITY AT RATED PRESSURE**

d = 0 ; r = 750

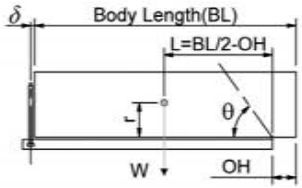


| BODY LENGTH (BL) | | | | | | OH |
|---|---|---|---|---|---|---|
| 5500 | | 5750 | | 6000 | | |
| 26 | 48° | 25 | 45° | 24 | 43° | 150 |
| 31 | 51° | 29 | 48° | 27 | 46° | 450 |
| 38 | 55° | 34 | 51° | 32 | 49° | 750 |

Tipping angle (θ)
Body + payload mass,W (tonne)

**For guidance only;**
Higher Rated Pressures may be possible. To check your application, email Edbro plc at <applications@edbro.co.uk>

## NOTES

- If hydraulic pressure is used to limit overloading, the system relief valve must be set to the Rated Pressure unless agreed otherwise by Edbro
- The system relief valve can be set to Maximum Pressure if the load is limited by other means.See RATINGS page for advice
- This cylinder is for lifting purposes only and sideload conditions must be avoided
- Cylinder is painted in primer paint to RAL5013
- See bracket options page BRKT01, BRKT02
- See installation instructions INSTALL01
- Use oil according to specification OIL01



Technical Specifications are subject to change without notice
Date Created/Updated: 22 December 2009 11:39:41
Refer www.edbro.com to confirm latest specification
All dimensions are in 'mm', unless otherwise stated

# Cylinder 4 stage front end with plain eye

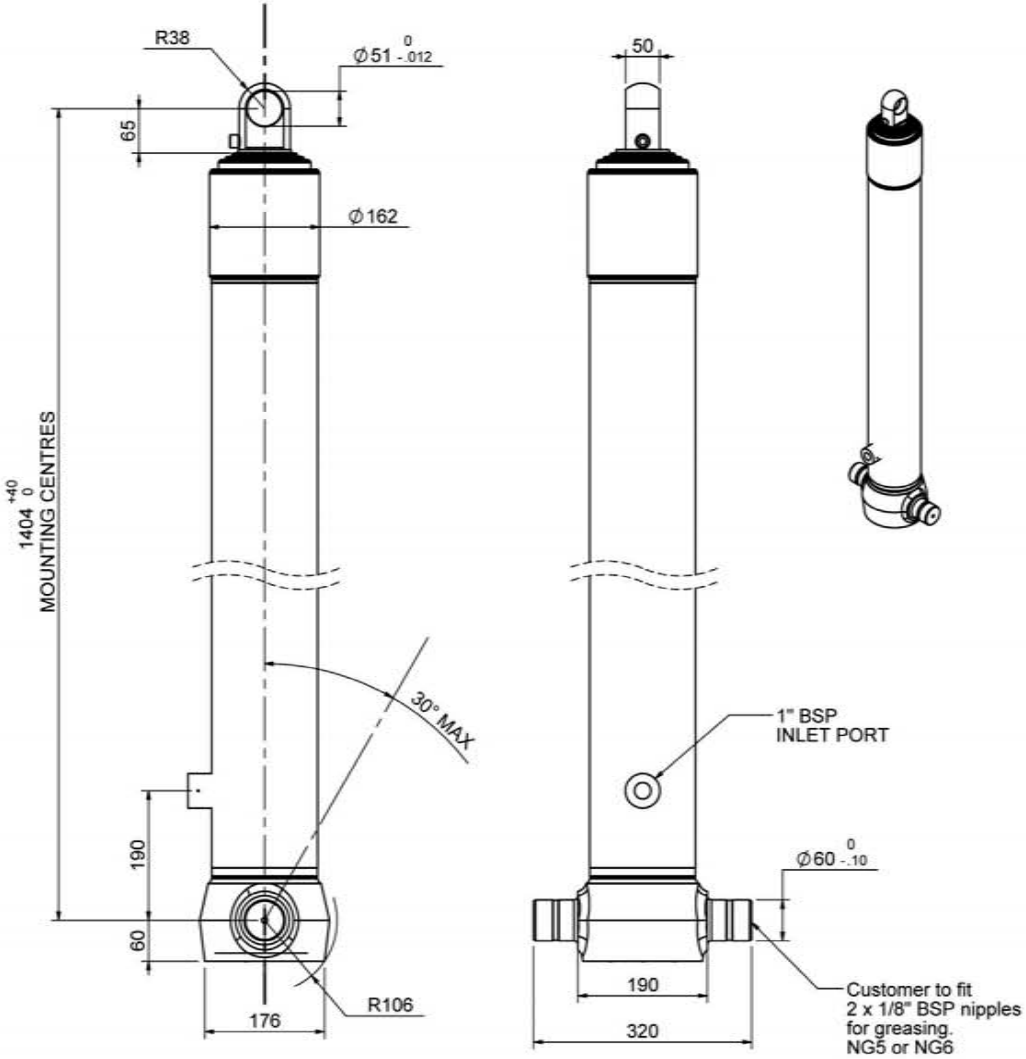


***Include 9mm Pull Out**
**All Stages Fully Chromed**

# NCS13OE464

| SPECIFICATION | | RATED CAPACITY : 20-30 TONNES*** | | |
|---|---|---|---|---|
| Stage | Diameter | Length | Stroke | Swept Volume |
| - | - | - | - | - |
| - | - | - | - | - |
| 0 | 155 | 1375 | - | - |
| 1 | 136 | 1340 | 1138 | 17 |
| 2 | 117 | 1340 | 1162 | 12 |
| 3 | 98 | 1340 | 1167 | 9 |
| 4 | 79 | 1340 | 1172 | 6 |
| Final stroke reduced by | 0 | Total (+5/-10) | 4639 | 44 |
| Cylinder Mass (Kg) | 119.21 | Priming Volume | | 11.6 |
| Rated Pressure (Bar) | 150 | Total Volume (Litres) | | 55.6 |
| Maximum Pressure (Bar) | 175 | Max. first stage thrust | | 200 KN |

## ***TIPPING CAPACITY AT RATED PRESSURE

d = 0 ; r = 750

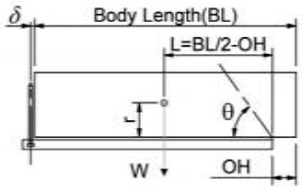


| BODY LENGTH (BL) | | | | | | OH |
|---|---|---|---|---|---|---|
| 6000 | | 6250 | | 6500 | | |
| 22 | 48° | 21 | 46° | 20 | 44° | 150 |
| 25 | 51° | 24 | 48° | 23 | 46° | 450 |
| 30 | 54° | 27 | 51° | 26 | 49° | 750 |

Tipping angle (θ)
Body + payload mass,W (tonne)

**For guidance only;**
Higher Rated Pressures may be possible. To check your application, email Edbro plc at <applications@edbro.co.uk>

## NOTES

- If hydraulic pressure is used to limit overloading, the system relief valve must be set to the Rated Pressure unless agreed otherwise by Edbro
- The system relief valve can be set to Maximum Pressure if the load is limited by other means.See RATINGS page for advice
- This cylinder is for lifting purposes only and sideload conditions must be avoided
- Cylinder is painted in primer paint to RAL5013
- See bracket options page BRKT01, BRKT02
- See installation instructions INSTALL01
- Use oil according to specification OIL01



Technical Specifications are subject to change without notice
Date Created/Updated: 22 December 2009 11:35:46
Refer www.edbro.com to confirm latest specification
All dimensions are in 'mm', unless otherwise stated

# Cylinder 4 stage front end with plain eye

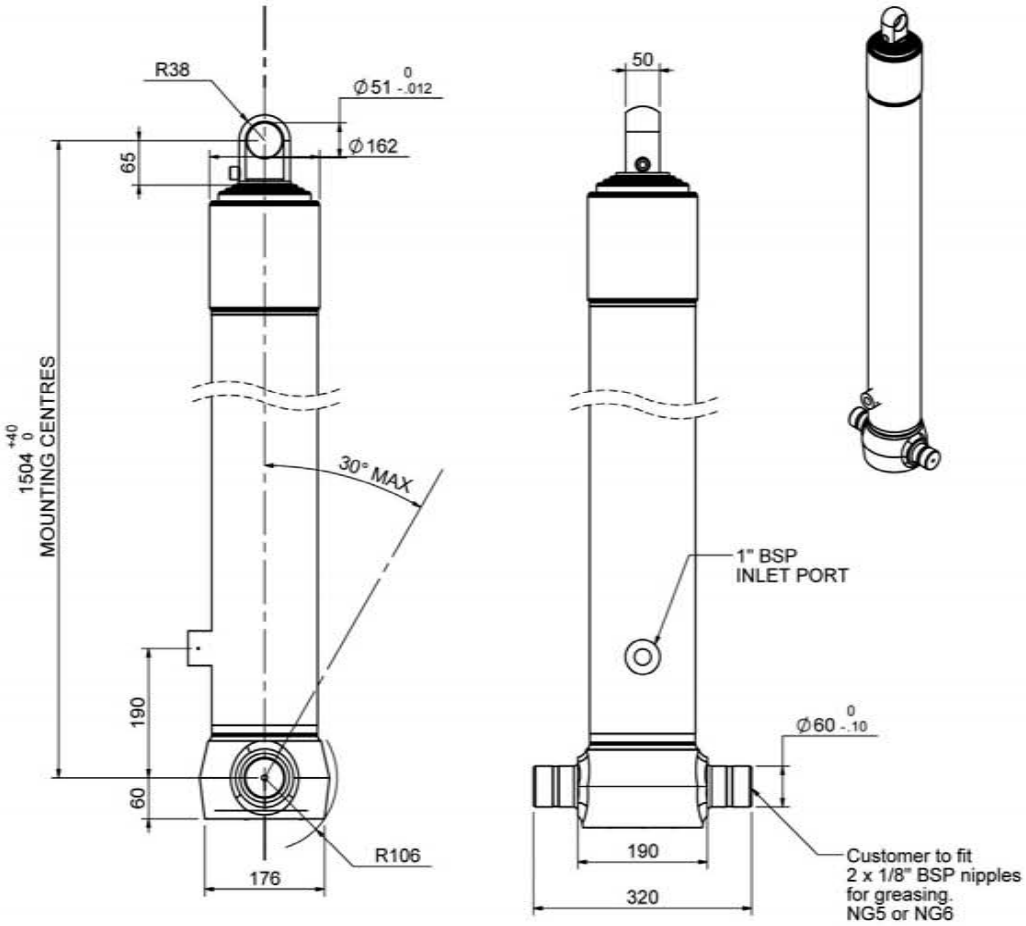


***Include 9mm Pull Out**
**All Stages Fully Chromed**

# NCS13OE504

| SPECIFICATION | | RATED CAPACITY : 18-25 TONNES*** | | |
|---|---|---|---|---|
| Stage | Diameter | Length | Stroke | Swept Volume |
| - | - | - | - | - |
| - | - | - | - | - |
| 0 | 155 | 1475 | - | - |
| 1 | 136 | 1440 | 1238 | 18 |
| 2 | 117 | 1440 | 1262 | 14 |
| 3 | 98 | 1440 | 1267 | 10 |
| 4 | 79 | 1440 | 1272 | 6 |
| Final stroke reduced by | 0 | Total (+5/-10) | 5039 | 48 |
| Cylinder Mass (Kg) | 126.58 | Priming Volume | | 12.6 |
| Rated Pressure (Bar) | 135 | Total Volume (Litres) | | 60.6 |
| Maximum Pressure (Bar) | 175 | Max. first stage thrust | | 200 KN |

## ***TIPPING CAPACITY AT RATED PRESSURE

d = 0 ; r = 750

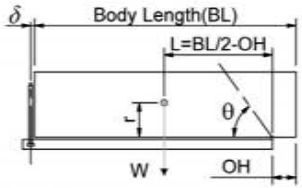


| BODY LENGTH (BL) | | | | | | OH |
|---|---|---|---|---|---|---|
| 6500 | | 6750 | | 7000 | | |
| 19 | 48° | 19 | 46° | 18 | 44° | 150 |
| 22 | 50° | 21 | 48° | 20 | 46° | 450 |
| 25 | 53° | 23 | 51° | 22 | 49° | 750 |

Tipping angle (θ)
Body + payload mass,W (tonne)

**For guidance only;**
Higher Rated Pressures may be possible. To check your application, email Edbro plc at <applications@edbro.co.uk>

## NOTES

- If hydraulic pressure is used to limit overloading, the system relief valve must be set to the Rated Pressure unless agreed otherwise by Edbro
- The system relief valve can be set to Maximum Pressure if the load is limited by other means.See RATINGS page for advice
- This cylinder is for lifting purposes only and sideload conditions must be avoided
- Cylinder is painted in primer paint to RAL5013
- See bracket options page BRKT01, BRKT02
- See installation instructions INSTALL01
- Use oil according to specification OIL01

Edbro SETTING THE INDUSTRY STANDARD
Transpecs QUALITY ON THE MOVE

Technical Specifications are subject to change without notice
Date Created/Updated: 22 December 2009 11:32:36
Refer www.edbro.com to confirm latest specification
All dimensions are in 'mm', unless otherwise stated

# Cylinder 4 stage front end with plain eye

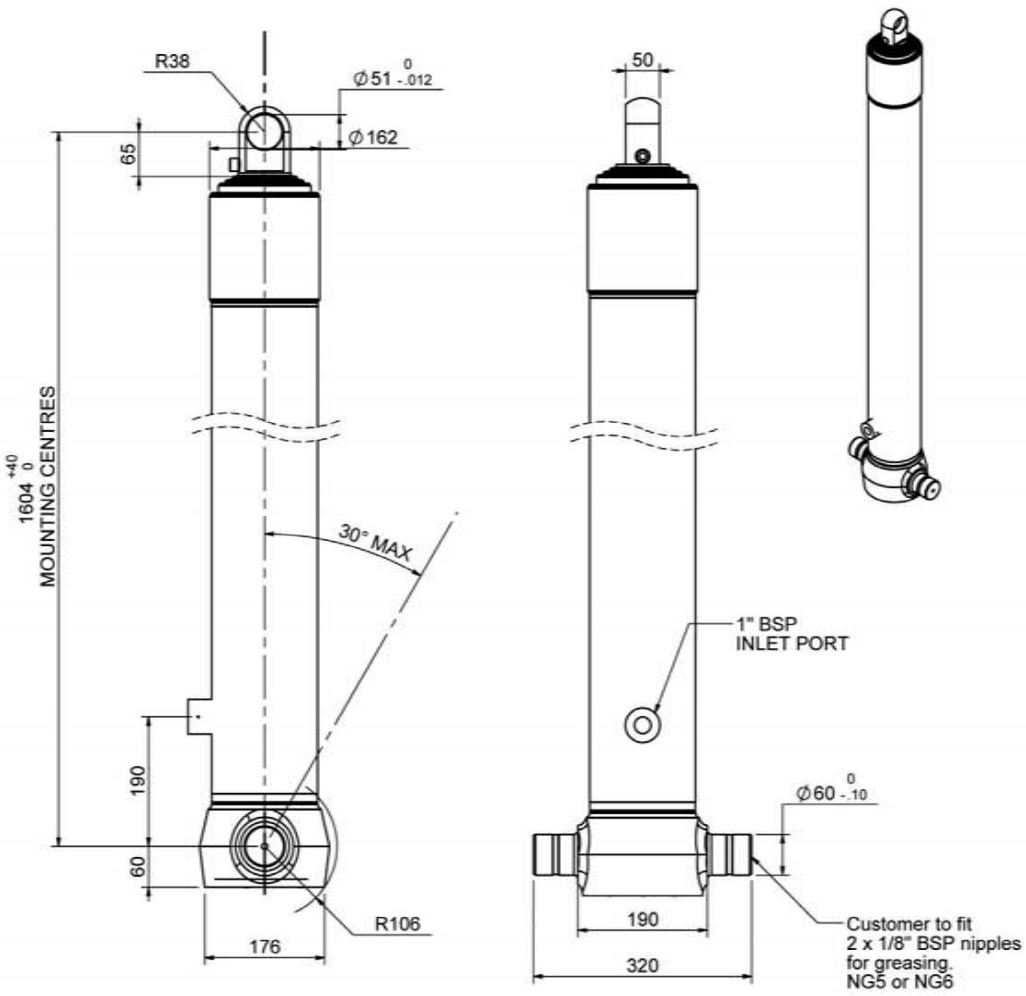


***Include 9mm Pull Out**
**All Stages Fully Chromed**

# NCS13OE544

| SPECIFICATION | | RATED CAPACITY : 14-20 TONNES*** | | |
|---|---|---|---|---|
| Stage | Diameter | Length | Stroke | Swept Volume |
| - | - | - | - | - |
| - | - | - | - | - |
| 0 | 155 | 1575 | - | - |
| 1 | 136 | 1540 | 1338 | 19 |
| 2 | 117 | 1540 | 1362 | 15 |
| 3 | 98 | 1540 | 1367 | 10 |
| 4 | 79 | 1540 | 1372 | 7 |
| Final stroke reduced by | 0 | Total (+5/-10) | 5439 | 51 |
| Cylinder Mass (Kg) | 133.95 | Priming Volume | | 13.5 |
| Rated Pressure (Bar) | 110 | Total Volume (Litres) | | 64.5 |
| Maximum Pressure (Bar) | 175 | Max. first stage thrust | | 200 KN |

## ***TIPPING CAPACITY AT RATED PRESSURE

d = 0 ; r = 750

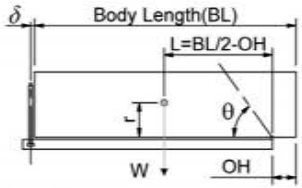


| BODY LENGTH (BL) | | | | | | OH |
|---|---|---|---|---|---|---|
| 6750 | | 7250 | | 7750 | | |
| 16 | 50° | 15 | 46° | 14 | 43° | 150 |
| 18 | 52° | 16 | 48° | 15 | 45° | 450 |
| 20 | 55° | 18 | 51° | 17 | 47° | 750 |

Tipping angle (θ)
Body + payload mass,W (tonne)

**For guidance only;**
Higher Rated Pressures may be possible. To check your application, email Edbro plc at <applications@edbro.co.uk>

## NOTES

- If hydraulic pressure is used to limit overloading, the system relief valve must be set to the Rated Pressure unless agreed otherwise by Edbro
- The system relief valve can be set to Maximum Pressure if the load is limited by other means.See RATINGS page for advice
- This cylinder is for lifting purposes only and sideload conditions must be avoided
- Cylinder is painted in primer paint to RAL5013
- See bracket options page BRKT01, BRKT02
- See installation instructions INSTALL01
- Use oil according to specification OIL01

Edbro SETTING THE INDUSTRY STANDARD
Transpecs QUALITY ON THE MOVE

Technical Specifications are subject to change without notice
Date Created/Updated: 22 December 2009 11:29:22
Refer www.edbro.com to confirm latest specification
All dimensions are in 'mm', unless otherwise stated

# Cylinder 5 stage front end with plain eye

# NCS15OE477

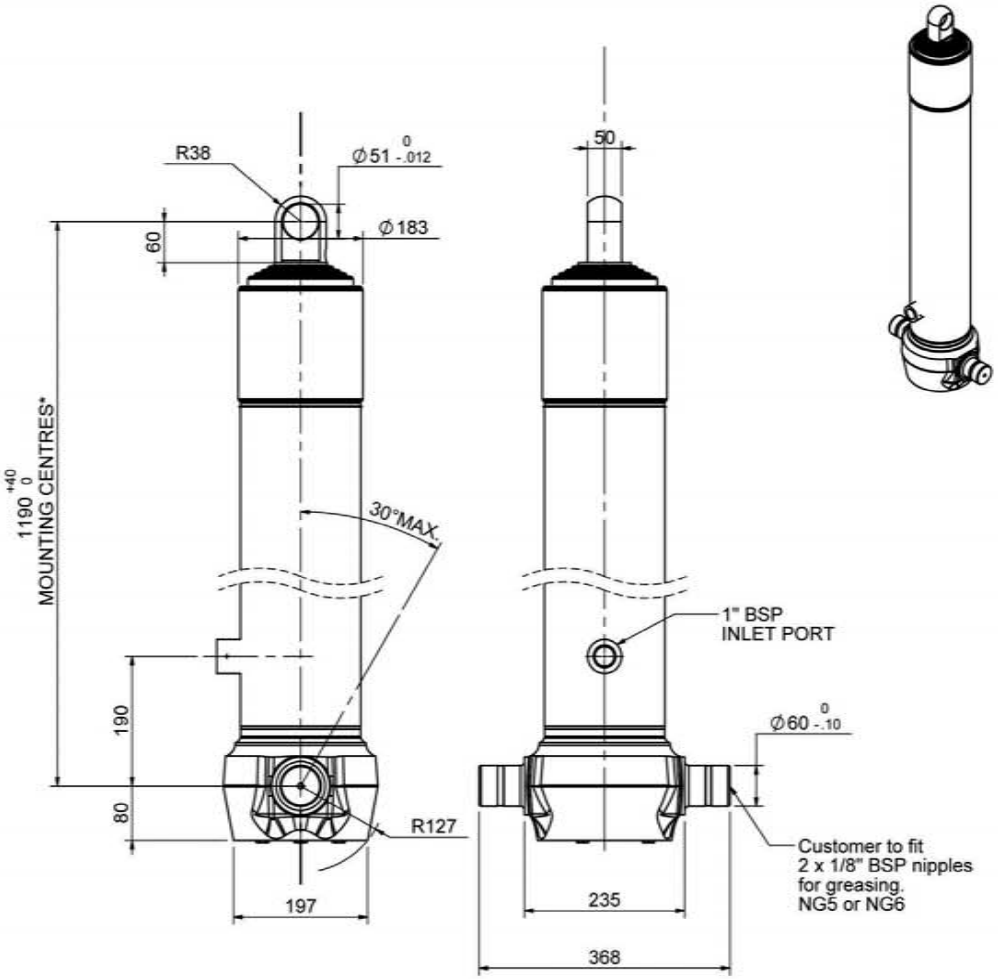


***Include 9mm Pull Out**
**All Stages Chrome Plated**

| SPECIFICATION | | RATED CAPACITY : 25-35 TONNES*** | | |
|---|---|---|---|---|
| Stage | Diameter | Length | Stroke | Swept Volume |
| - | - | - | - | - |
| 0 | 177 | - | - | - |
| 1 | 155 | 1175 | 927 | - |
| 2 | 136 | 1140 | 947 | 14 |
| 3 | 117 | 1140 | 962 | 10 |
| 4 | 102 | 1140 | 967 | 8 |
| 5 | 80 | 1140 | 972 | 5 |
| Final stroke reduced by | 0 | Total (+5/-10) | 4775 | 37 |
| Cylinder Mass (Kg) | 146.95 | Priming Volume | | 11.6 |
| Rated Pressure (Bar) | 135 | Total Volume (Litres) | | 48.6 |
| Maximum Pressure (Bar) | 175 | Max. first stage thrust | | 230 KN |

*****TIPPING CAPACITY AT RATED PRESSURE**

d = 0 ; r = 750

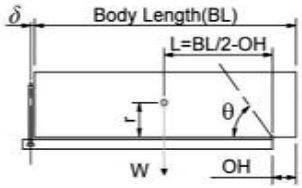


| BODY LENGTH (BL) | | | | | | OH |
|---|---|---|---|---|---|---|
| 6250 | | 6500 | | 6750 | | |
| 26 | 47° | 25 | 45° | 25 | 43° | 150 |
| 30 | 50° | 28 | 47° | 27 | 45° | 450 |
| 35 | 53° | 33 | 50° | 31 | 48° | 750 |

Tipping angle (θ)
Body + payload mass,W (tonne)

**For guidance only;**
Higher Rated Pressures may be possible. To check your application, email Edbro plc at <applications@edbro.co.uk>

## NOTES

- If hydraulic pressure is used to limit overloading, the system relief valve must be set to the Rated Pressure unless agreed otherwise by Edbro
- The system relief valve can be set to Maximum Pressure if the load is limited by other means.See RATINGS page for advice
- This cylinder is for lifting purposes only and sideload conditions must be avoided
- Cylinder is painted in primer paint to RAL5013
- See bracket options page BRKT01, BRKT02
- See installation instructions INSTALL01
- Use oil according to specification OIL01

Edbro SETTING THE INDUSTRY STANDARD
Transpecs QUALITY ON THE MOVE

Technical Specifications are subject to change without notice
Date Created/Updated: 19 November 2009 10:07:40
Refer www.edbro.com to confirm latest specification
All dimensions are in 'mm', unless otherwise stated

# Cylinder 4 stage front end with plain eye

# NCS15OE540

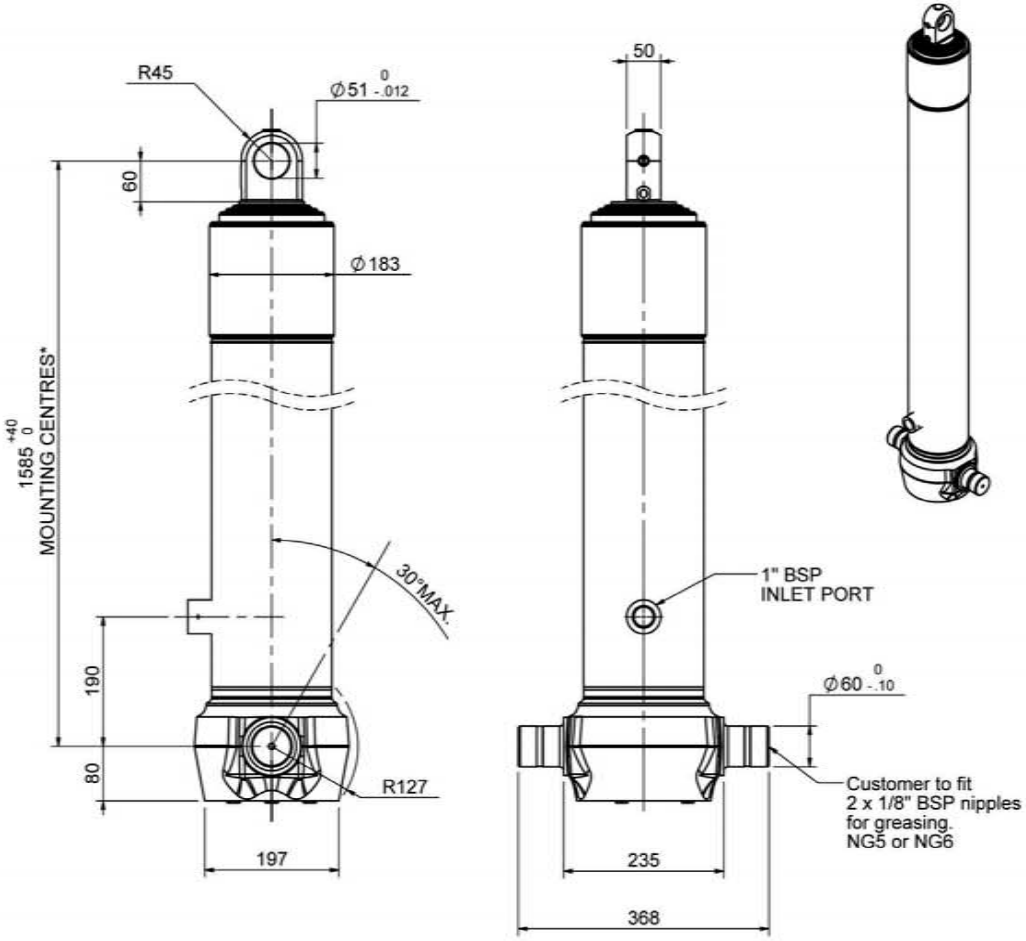


*Include 9mm Pull Out
All stages Chrome Plated

| SPECIFICATION | | RATED CAPACITY : 27-38 TONNES*** | | |
|---|---|---|---|---|
| Stage | Diameter | Length | Stroke | Swept Volume |
| - | - | - | - | - |
| - | - | - | - | - |
| 0 | 177 | 1575 | - | - |
| 1 | 155 | 1540 | 1327 | 25 |
| 2 | 136 | 1540 | 1347 | 20 |
| 3 | 117 | 1540 | 1362 | 15 |
| 4 | 98 | 1540 | 1367 | 10 |
| Final stroke reduced by | 0 | Total (+5/-10) | 5403 | 70 |
| Cylinder Mass (Kg) | 179.24 | Priming Volume | | 17.6 |
| Rated Pressure (Bar) | 135 | Total Volume (Litres) | | 87.6 |
| Maximum Pressure (Bar) | 175 | Max. first stage thrust | | 230 KN |

***TIPPING CAPACITY AT RATED PRESSURE

d = 0 ; r = 750

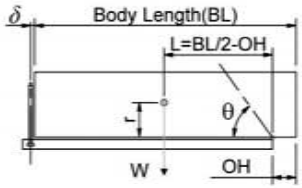


| BODY LENGTH (BL) | | | | | | OH |
|---|---|---|---|---|---|---|
| 6750 | | 7250 | | 7750 | | |
| 30 | 49° | 28 | 46° | 27 | 42° | 150 |
| 33 | 52° | 31 | 48° | 29 | 44° | 450 |
| 38 | 55° | 34 | 50° | 32 | 46° | 750 |

Tipping angle (θ)
Body + payload mass,W (tonne)

**For guidance only;**
Higher Rated Pressures may be possible. To check your application, email Edbro plc at <applications@edbro.co.uk>

NOTES

- If hydraulic pressure is used to limit overloading, the system relief valve must be set to the Rated Pressure unless agreed otherwise by Edbro
- The system relief valve can be set to Maximum Pressure if the load is limited by other means.See RATINGS page for advice
- This cylinder is for lifting purposes only and sideload conditions must be avoided
- Cylinder is painted in primer paint to RAL5013
- See bracket options page BRKT01, BRKT02
- See installation instructions INSTALL01
- Use oil according to specification OIL01

Edbro SETTING THE INDUSTRY STANDARD
Transpecs QUALITY ON THE MOVE

Technical Specifications are subject to change without notice
Date Created/Updated: 19 November 2009 09:33:42
Refer www.edbro.com to confirm latest specification
All dimensions are in 'mm', unless otherwise stated

# Cylinder 5 stage front end with plain eye

# NCS15OE577

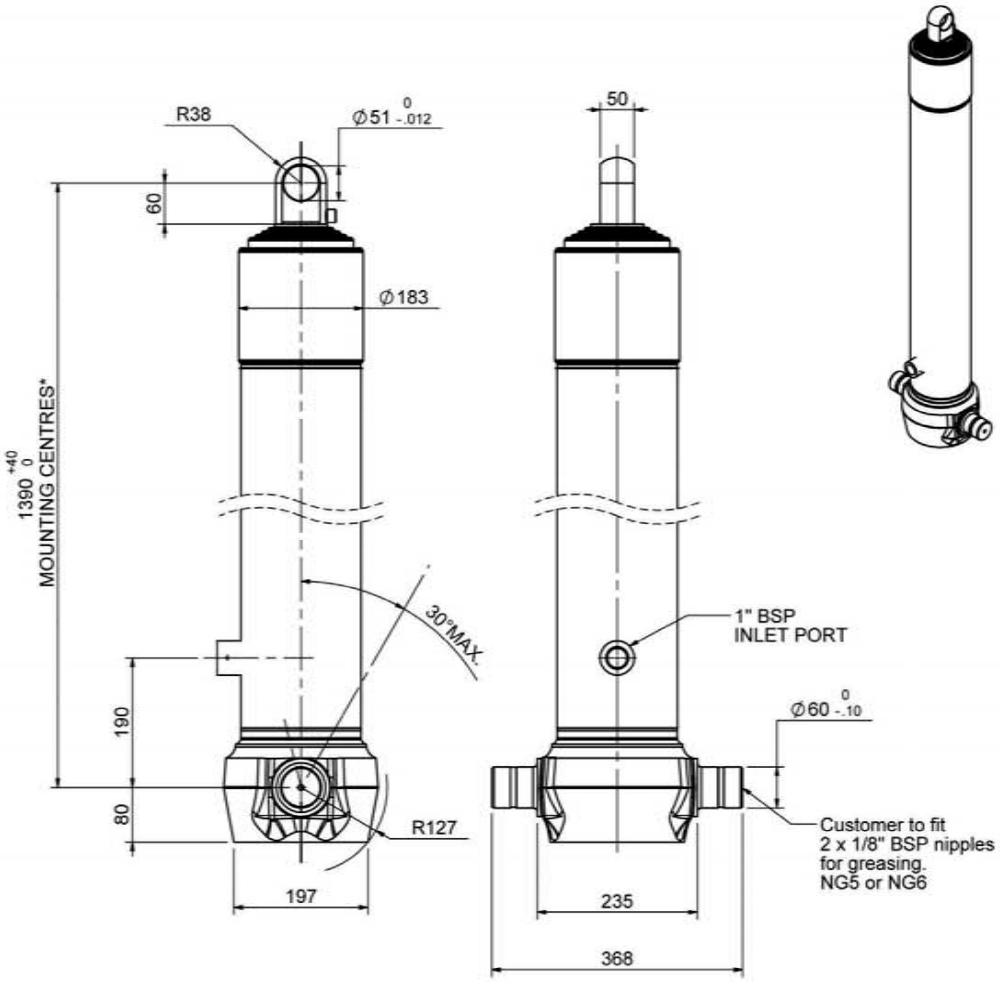


***Include 9mm Pull Out**
**All Stages Chrome Plated**

| SPECIFICATION | | RATED CAPACITY : 20-27 TONNES*** | | |
|---|---|---|---|---|
| Stage | Diameter | Length | Stroke | Swept Volume |
| - | - | - | - | - |
| 0 | 177 | - | - | - |
| 1 | 155 | 1375 | 1127 | - |
| 2 | 136 | 1340 | 1147 | 17 |
| 3 | 117 | 1340 | 1162 | 12 |
| 4 | 102 | 1340 | 1167 | 10 |
| 5 | 79.74 | 1340 | 1172 | 6 |
| Final stroke reduced by | 0 | Total (+5/-10) | 5775 | 45 |
| Cylinder Mass (Kg) | 167.16 | Priming Volume | | 13.9 |
| Rated Pressure (Bar) | 135 | Total Volume (Litres) | | 58.9 |
| Maximum Pressure (Bar) | 175 | Max. first stage thrust | | 230 KN |

*****TIPPING CAPACITY AT RATED PRESSURE**

d = 0 ; r = 750

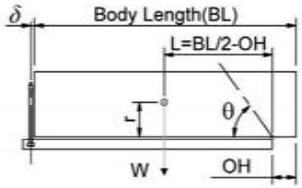


| BODY LENGTH (BL) | | | | | | OH |
|---|---|---|---|---|---|---|
| 7250 | | 7500 | | 7750 | | |
| 20 | 49° | 19 | 47° | 19 | 45° | 150 |
| 22 | 51° | 21 | 49° | 21 | 47° | 450 |
| 25 | 54° | 24 | 52° | 23 | 50° | 750 |

Tipping angle (θ)
Body + payload mass,W (tonne)

**For guidance only;**
Higher Rated Pressures may be possible. To check your application, email Edbro plc at <applications@edbro.co.uk>

## NOTES

- If hydraulic pressure is used to limit overloading, the system relief valve must be set to the Rated Pressure unless agreed otherwise by Edbro
- The system relief valve can be set to Maximum Pressure if the load is limited by other means.See RATINGS page for advice
- This cylinder is for lifting purposes only and sideload conditions must be avoided
- Cylinder is painted in primer paint to RAL5013
- See bracket options page BRKT01, BRKT02
- See installation instructions INSTALL01
- Use oil according to specification OIL01

Edbro SETTING THE INDUSTRY STANDARD
Transpecs QUALITY ON THE MOVE

Technical Specifications are subject to change without notice
Date Created/Updated: 05 March 2010 11:48:46
Refer www.edbro.com to confirm latest specification
All dimensions are in 'mm', unless otherwise stated

# Cylinder 5 stage front end with plain eye

# NCS17OE573

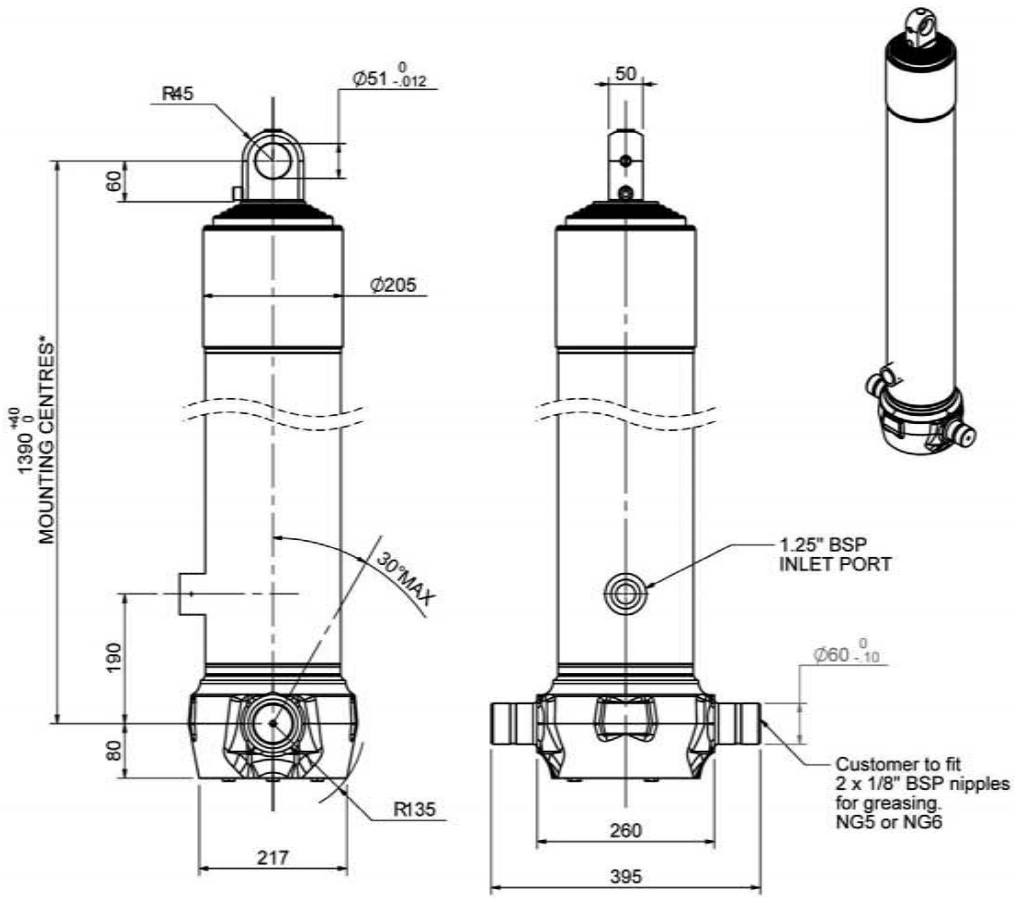


| SPECIFICATION | | RATED CAPACITY : 31-46 TONNES*** | | |
|---|---|---|---|---|
| Stage | Diameter | Length | Stroke | Swept Volume |
| - | - | - | - | - |
| 0 | 199 | 1375 | - | - |
| 1 | 176 | 1340 | 1117 | 27 |
| 2 | 155 | 1340 | 1137 | 21 |
| 3 | 136 | 1340 | 1147 | 17 |
| 4 | 117 | 1340 | 1162 | 12 |
| 5 | 98 | 1340 | 1167 | 9 |
| Final stroke reduced by | 0 | Total (+5/-10) | 5730 | 86 |
| Cylinder Mass (Kg) | 209.58 | Priming Volume | | 18 |
| Rated Pressure (Bar) | 150 | Total Volume (Litres) | | 104 |
| Maximum Pressure (Bar) | 175 | Max. first stage thrust | | 260 KN |

***TIPPING CAPACITY AT RATED PRESSURE

d = 0 ; r = 900

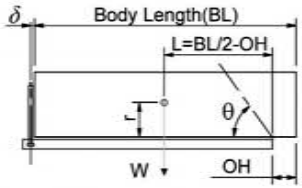


| BODY LENGTH (BL) | | | | | | OH |
|---|---|---|---|---|---|---|
| 7250 | | 7750 | | 8250 | | |
| 35 | 49° | 33 | 45° | 31 | 42° | 150 |
| 40 | 51° | 36 | 47° | 34 | 44° | 450 |
| 46 | 54° | 40 | 49° | 37 | 46° | 750 |

Tipping angle (θ)
Body + payload mass,W (tonne)

**For guidance only;**
Higher Rated Pressures may be possible. To check your application, email Edbro plc at <applications@edbro.co.uk>

NOTES

- If hydraulic pressure is used to limit overloading, the system relief valve must be set to the Rated Pressure unless agreed otherwise by Edbro
- The system relief valve can be set to Maximum Pressure if the load is limited by other means.See RATINGS page for advice
- This cylinder is for lifting purposes only and sideload conditions must be avoided
- Cylinder is painted in primer paint to RAL5013
- See bracket options page BRKT01, BRKT02
- See installation instructions INSTALL01
- Use oil according to specification OIL01

***Includes 9mm Pull Out**
**All Stages Chrome Plated**

Edbro SETTING THE INDUSTRY STANDARD
Transpecs QUALITY ON THE MOVE

Technical Specifications are subject to change without notice
Date Created/Updated: 26 August 2009 07:37:08
Refer www.edbro.com to confirm latest specification
All dimensions are in 'mm', unless otherwise stated

# Cylinder 5 stage front end with plain eye

# NCS17OE673

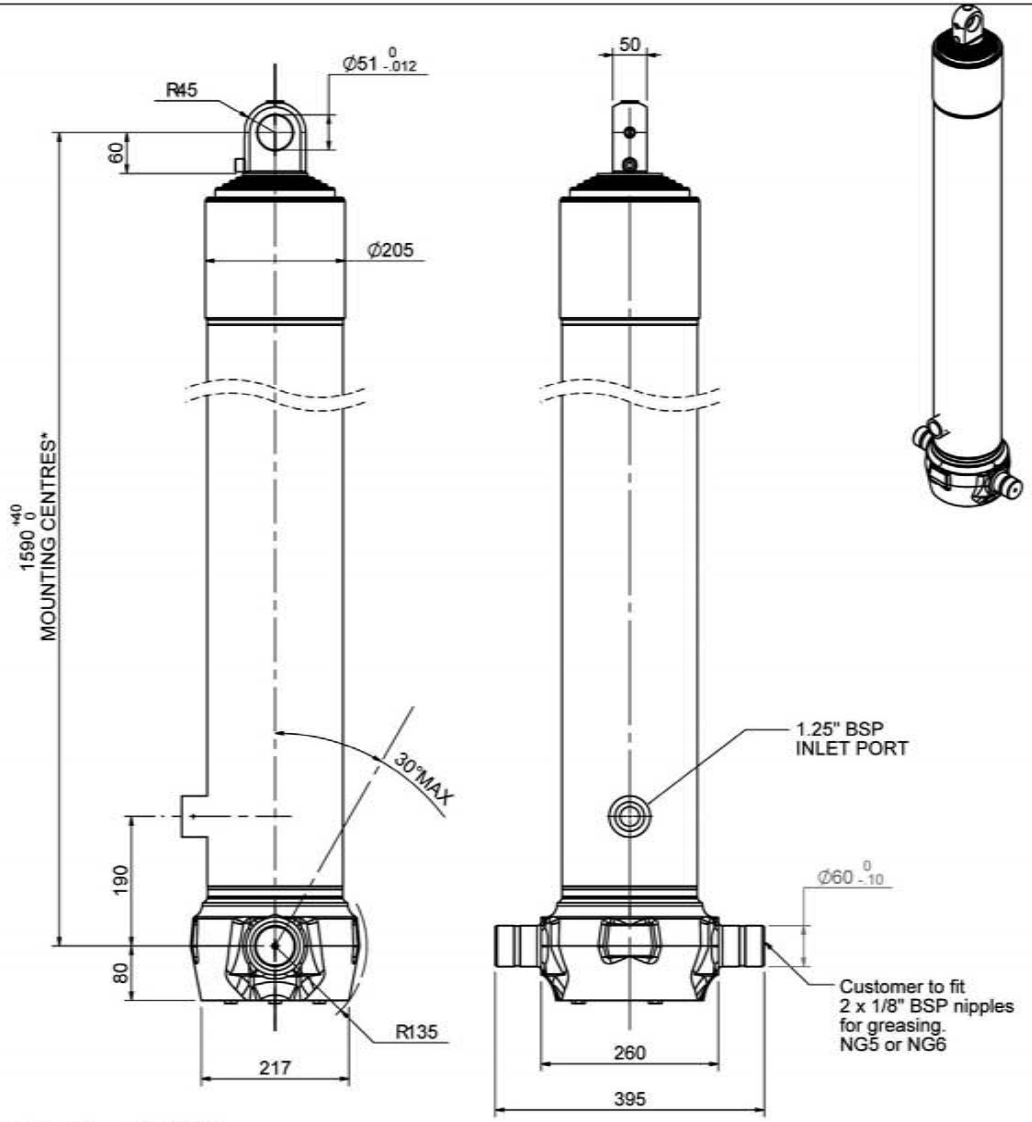


***Includes 9mm Pull Out**
**All Stages Chrome Plated**

| SPECIFICATION | | RATED CAPACITY : 31-39 TONNES*** | | |
|---|---|---|---|---|
| Stage | Diameter | Length | Stroke | Swept Volume |
| - | - | - | - | - |
| 0 | 199 | 1575 | - | - |
| 1 | 176 | 1540 | 1317 | 32 |
| 2 | 155 | 1540 | 1337 | 25 |
| 3 | 136 | 1540 | 1347 | 20 |
| 4 | 117 | 1540 | 1362 | 15 |
| 5 | 98 | 1540 | 1367 | 10 |
| Final stroke reduced by | 0 | Total (+5/-10) | 6730 | 102 |
| Cylinder Mass (Kg) | 234.56 | Priming Volume | | 21 |
| Rated Pressure (Bar) | 135 | Total Volume (Litres) | | 123 |
| Maximum Pressure (Bar) | 175 | Max. first stage thrust | | 260 KN |

***TIPPING CAPACITY AT RATED PRESSURE

d = 0 ; r = 900

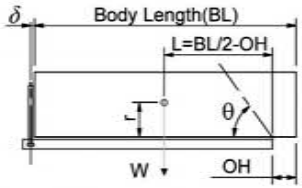


| BODY LENGTH (BL) | | | | | | OH |
|---|---|---|---|---|---|---|
| 8500 | | 9000 | | 9500 | | |
| 31 | 50° | | | | | 150 |
| 34 | 52° | 32 | 49° | | | 450 |
| 39 | 55° | 35 | 51° | 33 | 47° | 750 |

Tipping angle (θ)
Body + payload mass,W (tonne)

**For guidance only;**
Higher Rated Pressures may be possible. To check your application, email Edbro plc at <applications@edbro.co.uk>

NOTES

- If hydraulic pressure is used to limit overloading, the system relief valve must be set to the Rated Pressure unless agreed otherwise by Edbro
- The system relief valve can be set to Maximum Pressure if the load is limited by other means.See RATINGS page for advice
- This cylinder is for lifting purposes only and sideload conditions must be avoided
- Cylinder is painted in primer paint to RAL5013
- See bracket options page BRKT01, BRKT02
- See installation instructions INSTALL01
- Use oil according to specification OIL01

Edbro SETTING THE INDUSTRY STANDARD
Transpecs QUALITY ON THE MOVE

Technical Specifications are subject to change without notice
Date Created/Updated: 26 August 2009 08:06:58
Refer www.edbro.com to confirm latest specification
All dimensions are in 'mm', unless otherwise stated

# Cylinder 5 stage front end with plain eye

## NCS18OE823

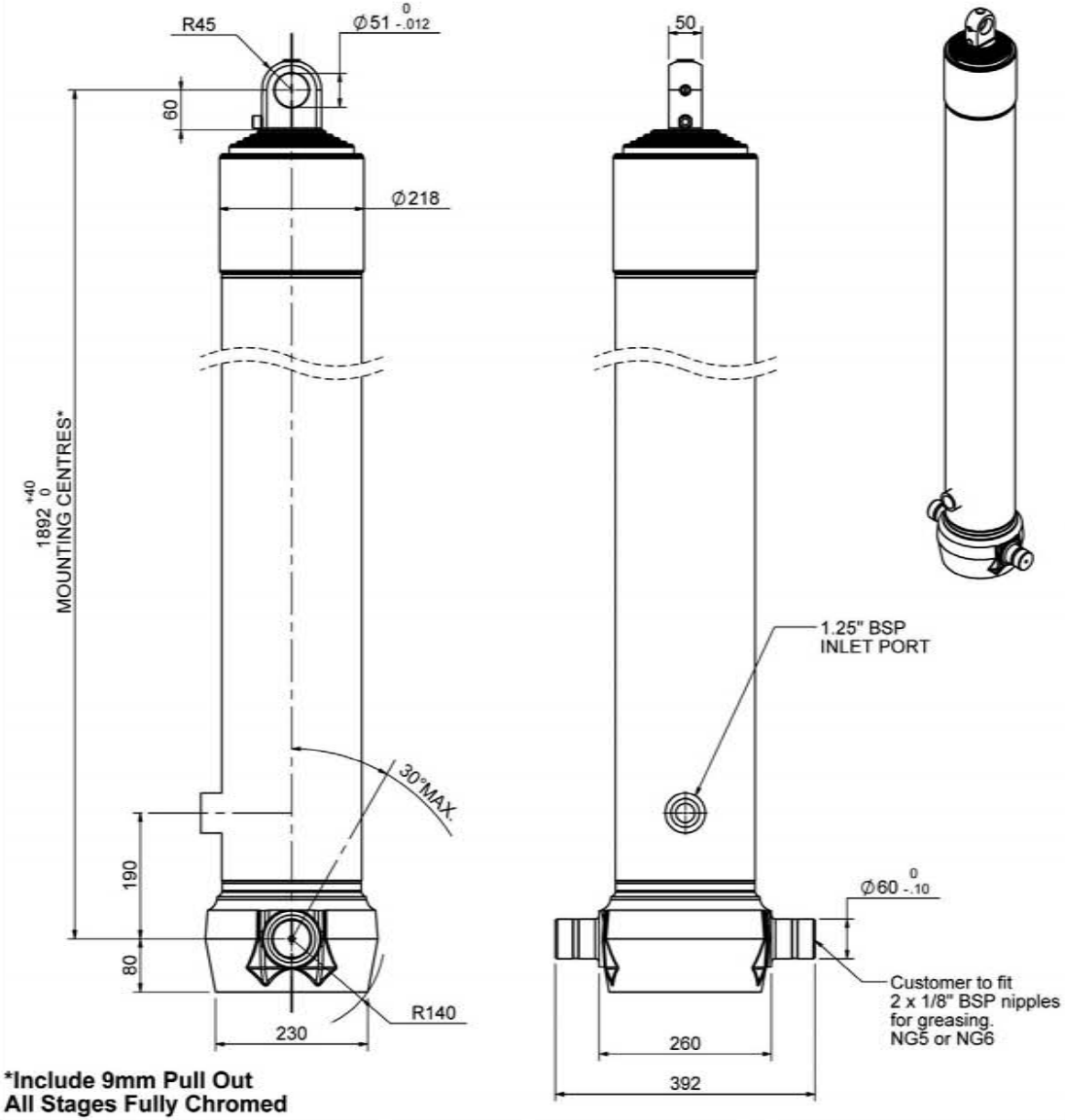


***Include 9mm Pull Out**
**All Stages Fully Chromed**

| SPECIFICATION | | RATED CAPACITY : 27-31 TONNES** | | |
|---|---|---|---|---|
| Stage | Diameter | Length | Stroke | Swept Volume |
| - | - | - | - | - |
| 0 | 211 | 1875 | - | - |
| 1 | 188 | 1840 | 1617 | 45 |
| 2 | 167 | 1840 | 1637 | 36 |
| 3 | 147 | 1840 | 1647 | 28 |
| 4 | 127 | 1840 | 1662 | 21 |
| 5 | 105 | 1840 | 1667 | 14 |
| Final stroke reduced by | 0 | Total (+5/-10) | 8230 | 144 |
| Cylinder Mass (Kg) | 319.95 | Priming Volume | | 25 |
| Rated Pressure (Bar) | 110 | Total Volume (Litres) | | 169 |
| Maximum Pressure (Bar) | 175 | Max. first stage thrust | | 260 KN |

****TIPPING CAPACITY AT RATED PRESSURE**

d = 0 ; r = 900

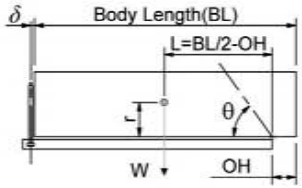


| BODY LENGTH (BL) | | | | | | OH |
|---|---|---|---|---|---|---|
| 10500 | | 11000 | | 11500 | | |
| 27 | 48° | | | | | 150 |
| 29 | 49° | 27 | 47° | | | 450 |
| 31 | 51° | 29 | 48° | 28 | 46° | 750 |

Tipping angle (θ)
Body + payload mass,W (tonne)

**For guidance only;**
Higher Rated Pressures may be possible. To check your application, email Edbro plc at <applications@edbro.co.uk>

NOTES

- If hydraulic pressure is used to limit overloading, the system relief valve must be set to the Rated Pressure unless agreed otherwise by Edbro
- The system relief valve can be set to Maximum Pressure if the load is limited by other means.See RATINGS page for advice
- This cylinder is for lifting purposes only and sideload conditions must be avoided
- Cylinder is painted in primer paint to RAL5013
- See bracket options page BRKT01, BRKT02
- See installation instructions INSTALL01
- Use oil according to specification OIL01

Edbro SETTING THE INDUSTRY STANDARD
Transpecs QUALITY ON THE MOVE

Technical Specifications are subject to change without notice
Date Created/Updated: 31 March 2010 11:17:10
Refer www.edbro.com to confirm latest specification
All dimensions are in 'mm', unless otherwise stated

# Cylinder 5 stage front end with Outer Cover

**ALLOW 50mm TO REMOVE CAP FOR SERVICING

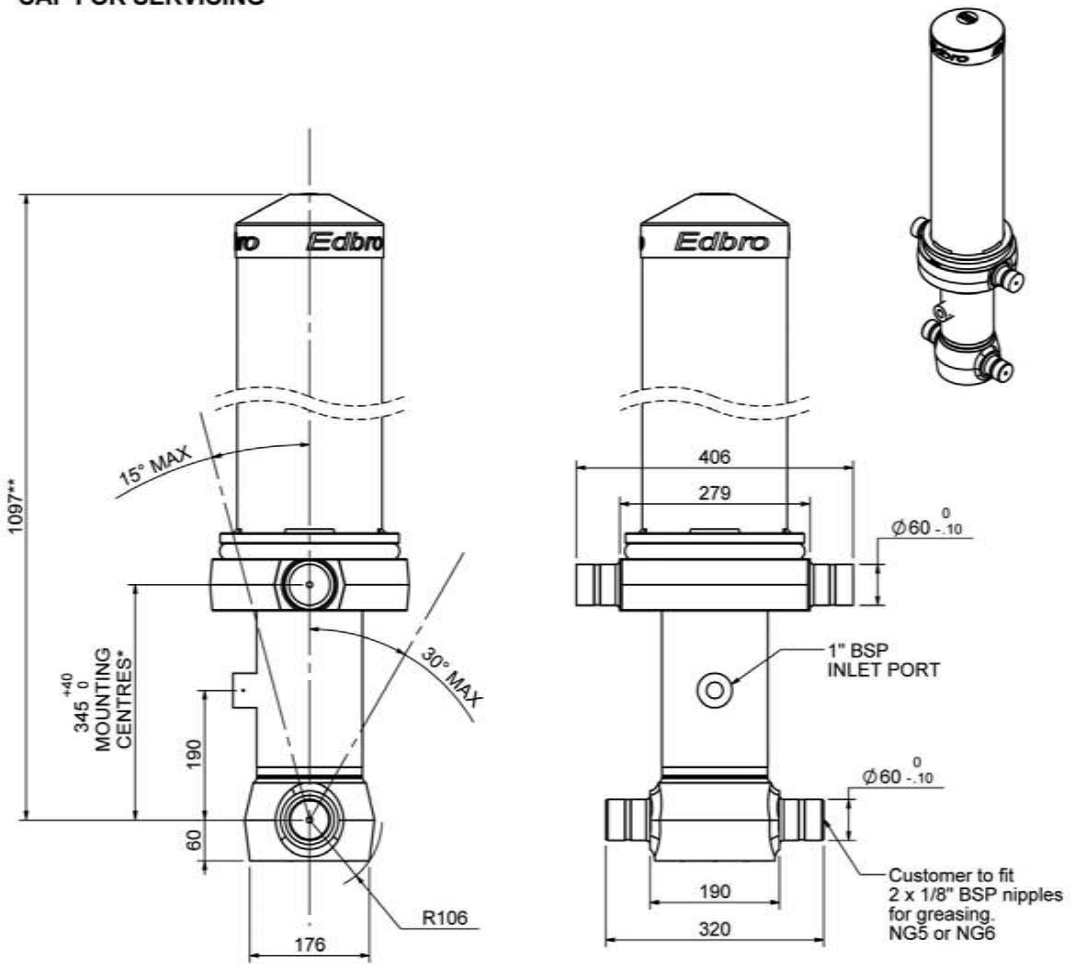


*Include 10mm Pull Out
All Stages Chrome Plated

# NCS13OO407

| SPECIFICATION | | RATED CAPACITY : 17-32 TONNES*** | | |
|---|---|---|---|---|
| Stage | Diameter | Length | Stroke | Swept Volume |
| OUTER COVER | 213 | 700 | - | - |
| 0 | 136 | 1025 | - | - |
| 1 | 136 | 990 | 787 | 11 |
| 2 | 117 | 990 | 812 | 9 |
| 3 | 98 | 990 | 817 | 6 |
| 4 | 79 | 990 | 822 | 4 |
| 5 | 63 | 990 | 827 | 3 |
| Final stroke reduced by | 0 | Total (+5/-10) | 4065 | 33 |
| Cylinder Mass (Kg) | 143.97 | Priming Volume | | 7.7 |
| Rated Pressure (Bar) | 175 | Total Volume (Litres) | | 40.7 |
| Maximum Pressure (Bar) | 175 | Max. first stage thrust | | 170 KN |

***TIPPING CAPACITY AT RATED PRESSURE

d = 178 ; r = 750

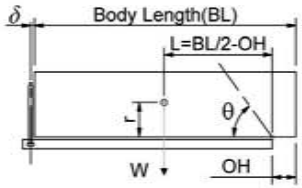


| BODY LENGTH (BL) | | | | | | OH |
|---|---|---|---|---|---|---|
| 5000 | | 5250 | | 5500 | | |
| 20 | 48° | 18 | 46° | 17 | 43° | 150 |
| 24 | 51° | 22 | 49° | 20 | 46° | 450 |
| 32 | 55° | 28 | 52° | 25 | 49° | 750 |

Tipping angle (θ)
Body + payload mass,W (tonne)

**For guidance only;**
Higher Rated Pressures may be possible. To check your application, email Edbro plc at <applications@edbro.co.uk>

NOTES

- If hydraulic pressure is used to limit overloading, the system relief valve must be set to the Rated Pressure unless agreed otherwise by Edbro
- The system relief valve can be set to Maximum Pressure if the load is limited by other means.See RATINGS page for advice
- This cylinder is for lifting purposes only and sideload conditions must be avoided
- Cylinder is painted in primer paint to RAL5013
- See bracket options page BRKT01, BRKT02
- See installation instructions INSTALL01
- Use oil according to specification OIL01

Edbro SETTING THE INDUSTRY STANDARD
Transpecs QUALITY ON THE MOVE

Technical Specifications are subject to change without notice
Date Created/Updated: 23 December 2009 11:36:14
Refer www.edbro.com to confirm latest specification
All dimensions are in 'mm', unless otherwise stated

# Cylinder 5 stage front end with Outer Cover

****ALLOW 50mm TO REMOVE CAP FOR SERVICING**

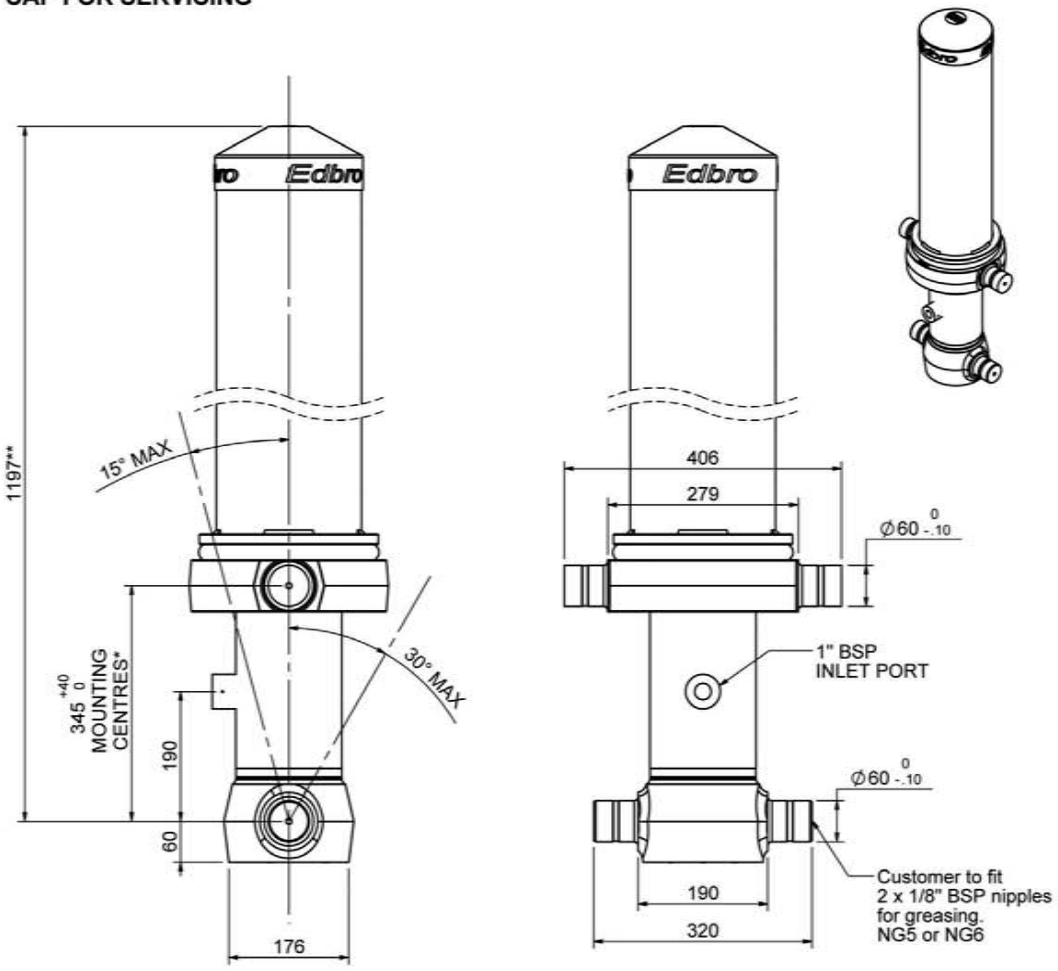


***Include 10mm Pull Out**
**All Stages Chrome Plated**

# NCS13OO457

| SPECIFICATION | | RATED CAPACITY : 17-26 TONNES*** | | |
|---|---|---|---|---|
| Stage | Diameter | Length | Stroke | Swept Volume |
| OUTER COVER | 213 | 800 | - | - |
| 0 | 136 | 1125 | - | - |
| 1 | 136 | 1090 | 887 | 13 |
| 2 | 117 | 1090 | 912 | 10 |
| 3 | 98 | 1090 | 917 | 7 |
| 4 | 79 | 1090 | 922 | 5 |
| 5 | 63 | 1090 | 927 | 3 |
| Final stroke reduced by | 0 | Total (+5/-10) | 4565 | 38 |
| Cylinder Mass (Kg) | 154.00 | Priming Volume | | 8.5 |
| Rated Pressure (Bar) | 175 | Total Volume (Litres) | | 46.5 |
| Maximum Pressure (Bar) | 175 | Max. first stage thrust | | 170 KN |

*****TIPPING CAPACITY AT RATED PRESSURE**

d = 178 ; r = 750

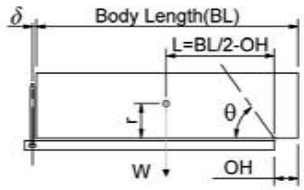


| BODY LENGTH (BL) | | | | | | OH |
|---|---|---|---|---|---|---|
| 5750 | | 6000 | | 6250 | | |
| 18 | 47° | 17 | 45° | 17 | 43° | 150 |
| 21 | 50° | 20 | 47° | 19 | 45° | 450 |
| 26 | 53° | 23 | 50° | 22 | 48° | 750 |

Tipping angle (θ)
Body + payload mass,W (tonne)

**For guidance only;**
Higher Rated Pressures may be possible. To check your application, email Edbro plc at <applications@edbro.co.uk>

**NOTES**

- If hydraulic pressure is used to limit overloading, the system relief valve must be set to the Rated Pressure unless agreed otherwise by Edbro
- The system relief valve can be set to Maximum Pressure if the load is limited by other means.See RATINGS page for advice
- This cylinder is for lifting purposes only and sideload conditions must be avoided
- Cylinder is painted in primer paint to RAL5013
- See bracket options page BRKT01, BRKT02
- See installation instructions INSTALL01
- Use oil according to specification OIL01

# Cylinder 4 stage front end with Outer Cover

**ALLOW 50mm TO REMOVE CAP FOR SERVICING

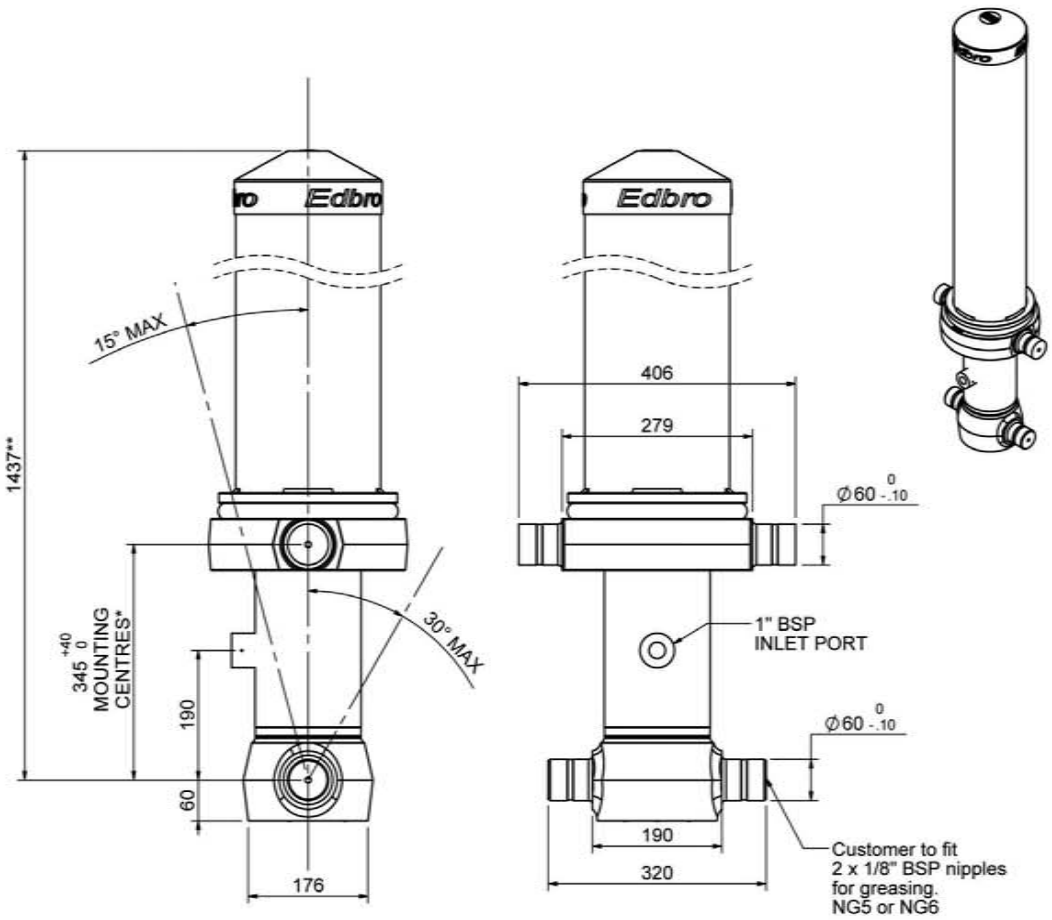


*Include 9mm Pull Out
All Stages Fully Chromed

# NCS13OO464

| SPECIFICATION | | RATED CAPACITY : 25-38 TONNES*** | | |
|---|---|---|---|---|
| Stage | Diameter | Length | Stroke | Swept Volume |
| - | - | - | - | - |
| OUTER COVER | 213 | 1040 | - | - |
| 0 | 155 | 1375 | - | - |
| 1 | 136 | 1340 | 1138 | 17 |
| 2 | 117 | 1340 | 1162 | 12 |
| 3 | 98 | 1340 | 1167 | 9 |
| 4 | 79 | 1340 | 1172 | 6 |
| Final stroke reduced by | 0 | Total (+5/-10) | 4639 | 44 |
| Cylinder Mass (Kg) | 167.87 | Priming Volume | | 11.6 |
| Rated Pressure (Bar) | 175 | Total Volume (Litres) | | 55.6 |
| Maximum Pressure (Bar) | 175 | Max. first stage thrust | | 170 KN |

***TIPPING CAPACITY AT RATED PRESSURE

d = 178 ; r = 750

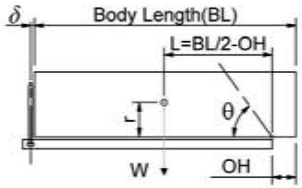


| BODY LENGTH (BL) | | | | | | OH |
|---|---|---|---|---|---|---|
| 5750 | | 6000 | | 6250 | | |
| 27 | 48° | 26 | 46° | 25 | 44° | 150 |
| 32 | 50° | 30 | 48° | 28 | 46° | 450 |
| 38 | 54° | 35 | 51° | 33 | 49° | 750 |

Tipping angle (θ)
Body + payload mass,W (tonne)

**For guidance only;**
Higher Rated Pressures may be possible. To check your application, email Edbro plc at <applications@edbro.co.uk>

NOTES

- If hydraulic pressure is used to limit overloading, the system relief valve must be set to the Rated Pressure unless agreed otherwise by Edbro
- The system relief valve can be set to Maximum Pressure if the load is limited by other means.See RATINGS page for advice
- This cylinder is for lifting purposes only and sideload conditions must be avoided
- Cylinder is painted in primer paint to RAL5013
- See bracket options page BRKT01, BRKT02
- See installation instructions INSTALL01
- Use oil according to specification OIL01

Edbro SETTING THE INDUSTRY STANDARD
Transpecs QUALITY ON THE MOVE

Technical Specifications are subject to change without notice
Date Created/Updated: 23 December 2009 12:43:10
Refer www.edbro.com to confirm latest specification
All dimensions are in 'mm', unless otherwise stated

# Cylinder 4 stage front end with Outer Cover

**ALLOW 50mm TO REMOVE CAP FOR SERVICING

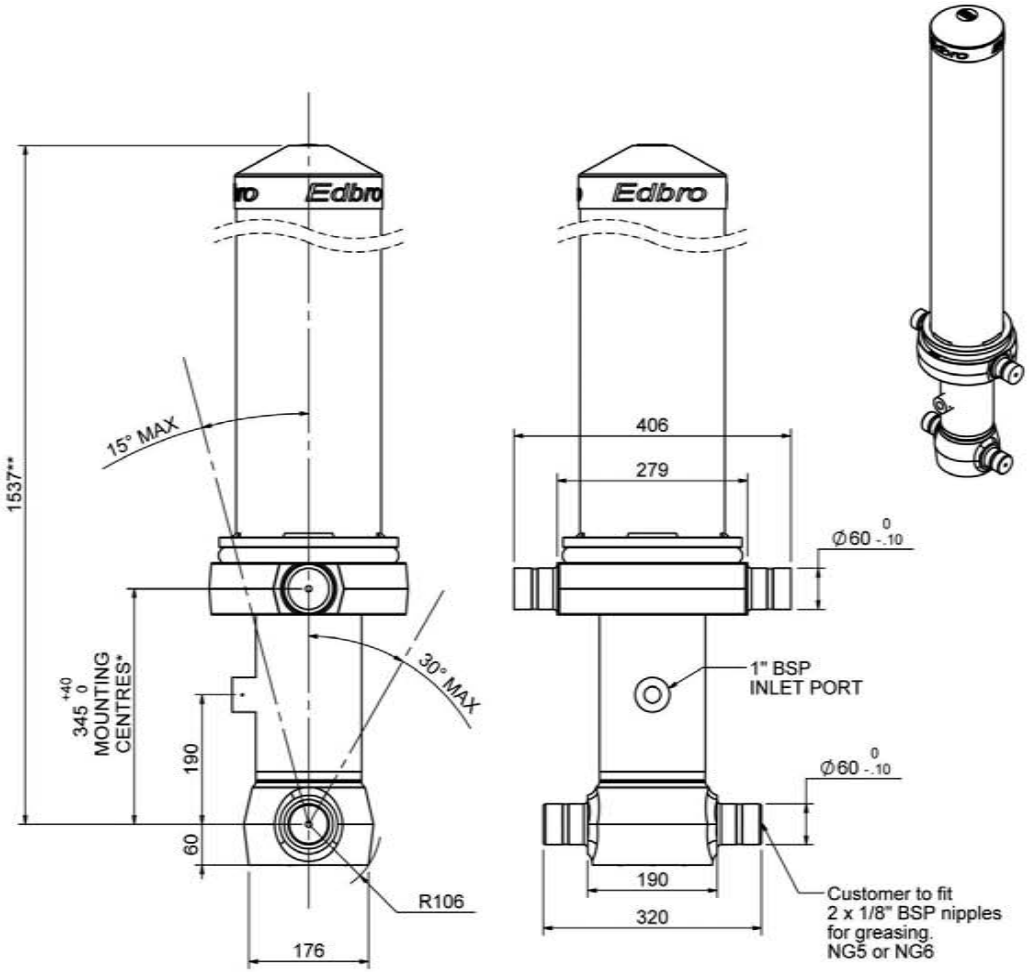


*Include 9mm Pull Out
All Stages Chrome Plated

# NCS13OO504

| SPECIFICATION | | | RATED CAPACITY : 24-38 TONNES*** | |
|---|---|---|---|---|
| Stage | Diameter | Length | Stroke | Swept Volume |
| - | - | - | - | - |
| OUTER COVER | 213 | 1140 | - | - |
| 0 | 155 | 1475 | - | - |
| 1 | 136 | 1440 | 1238 | 18 |
| 2 | 117 | 1440 | 1262 | 14 |
| 3 | 98 | 1440 | 1267 | 10 |
| 4 | 79 | 1440 | 1272 | 6 |
| Final stroke reduced by | 0 | Total (+5/-10) | 5039 | 48 |
| Cylinder Mass (Kg) | 176.2 | Priming Volume | | 12.6 |
| Rated Pressure (Bar) | 175 | Total Volume (Litres) | | 60.6 |
| Maximum Pressure (Bar) | 175 | Max. first stage thrust | | 170 KN |

***TIPPING CAPACITY AT RATED PRESSURE

d = 178 ; r = 750

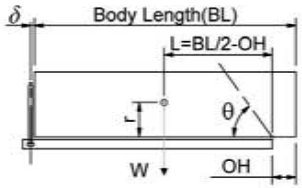


| BODY LENGTH (BL) | | | | | | OH |
|---|---|---|---|---|---|---|
| 6000 | | 6500 | | 7000 | | |
| 28 | 50° | 26 | 46° | 24 | 42° | 150 |
| 32 | 53° | 29 | 48° | 27 | 44° | 450 |
| 38 | 56° | 33 | 51° | 30 | 46° | 750 |

Tipping angle (θ)
Body + payload mass,W (tonne)

**For guidance only;**
Higher Rated Pressures may be possible. To check your application, email Edbro plc at <applications@edbro.co.uk>

NOTES

- If hydraulic pressure is used to limit overloading, the system relief valve must be set to the Rated Pressure unless agreed otherwise by Edbro
- The system relief valve can be set to Maximum Pressure if the load is limited by other means.See RATINGS page for advice
- This cylinder is for lifting purposes only and sideload conditions must be avoided
- Cylinder is painted in primer paint to RAL5013
- See bracket options page BRKT01, BRKT02
- See installation instructions INSTALL01
- Use oil according to specification OIL01

Edbro SETTING THE INDUSTRY STANDARD
Transpecs QUALITY ON THE MOVE

Technical Specifications are subject to change without notice
Date Created/Updated: 23 December 2009 12:53:54
Refer www.edbro.com to confirm latest specification
All dimensions are in 'mm', unless otherwise stated

# Cylinder 4 stage front end with Outer Cover

**ALLOW 50mm TO REMOVE CAP FOR SERVICING

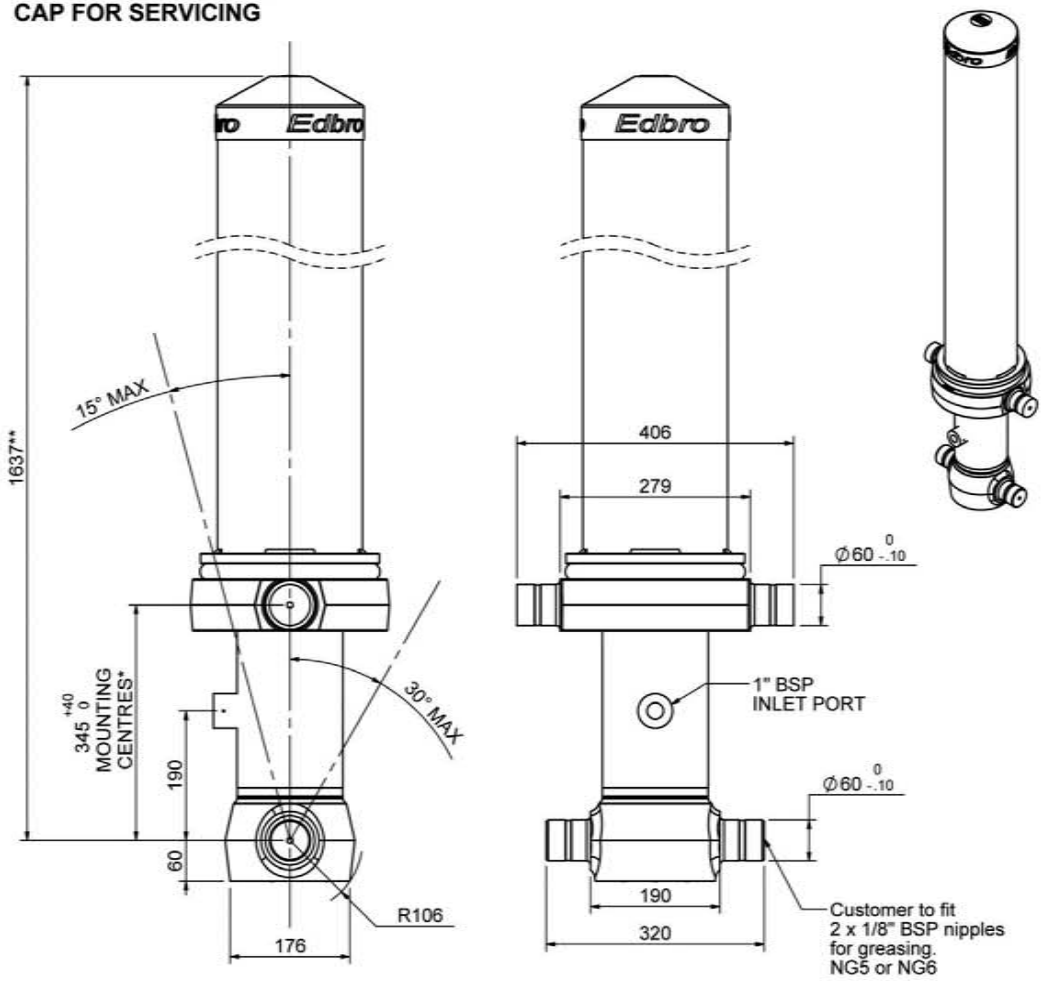


*Include 9mm Pull Out
All Stages Chrome Plated

# NCS13OO544

| SPECIFICATION | | RATED CAPACITY : 24-36 TONNES*** | | |
|---|---|---|---|---|
| Stage | Diameter | Length | Stroke | Swept Volume |
| - | - | - | - | - |
| OUTER COVER | 213 | 1240 | - | - |
| 0 | 155 | 1575 | - | - |
| 1 | 136 | 1540 | 1338 | 19 |
| 2 | 117 | 1540 | 1362 | 15 |
| 3 | 98 | 1540 | 1367 | 10 |
| 4 | 79 | 1540 | 1372 | 7 |
| Final stroke reduced by | 0 | Total (+5/-10) | 5439 | 51 |
| Cylinder Mass (Kg) | 182.91 | Priming Volume | | 13.5 |
| Rated Pressure (Bar) | 175 | Total Volume (Litres) | | 64.5 |
| Maximum Pressure (Bar) | 175 | Max. first stage thrust | | 170 KN |

***TIPPING CAPACITY AT RATED PRESSURE

d = 178 ; r = 750

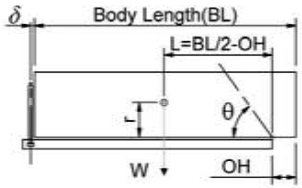


| BODY LENGTH (BL) | | | | | | OH |
|---|---|---|---|---|---|---|
| 6500 | | 7000 | | 7500 | | |
| 27 | 50° | 25 | 46° | 24 | 43° | 150 |
| 31 | 52° | 28 | 48° | 26 | 44° | 450 |
| 36 | 55° | 31 | 50° | 29 | 46° | 750 |

Tipping angle (θ)
Body + payload mass,W (tonne)

**For guidance only;**
Higher Rated Pressures may be possible. To check your application, email Edbro plc at <applications@edbro.co.uk>

NOTES

- If hydraulic pressure is used to limit overloading, the system relief valve must be set to the Rated Pressure unless agreed otherwise by Edbro
- The system relief valve can be set to Maximum Pressure if the load is limited by other means.See RATINGS page for advice
- This cylinder is for lifting purposes only and sideload conditions must be avoided
- Cylinder is painted in primer paint to RAL5013
- See bracket options page BRKT01, BRKT02
- See installation instructions INSTALL01
- Use oil according to specification OIL01

Edbro SETTING THE INDUSTRY STANDARD
Transpecs QUALITY ON THE MOVE

Technical Specifications are subject to change without notice
Date Created/Updated: 23 December 2009 12:12:20
Refer www.edbro.com to confirm latest specification
All dimensions are in 'mm', unless otherwise stated

# Cylinder 4 stage front end with Outer Cover

# NCS15OO540

**ALLOW 50mm TO REMOVE CAP FOR SERVICING

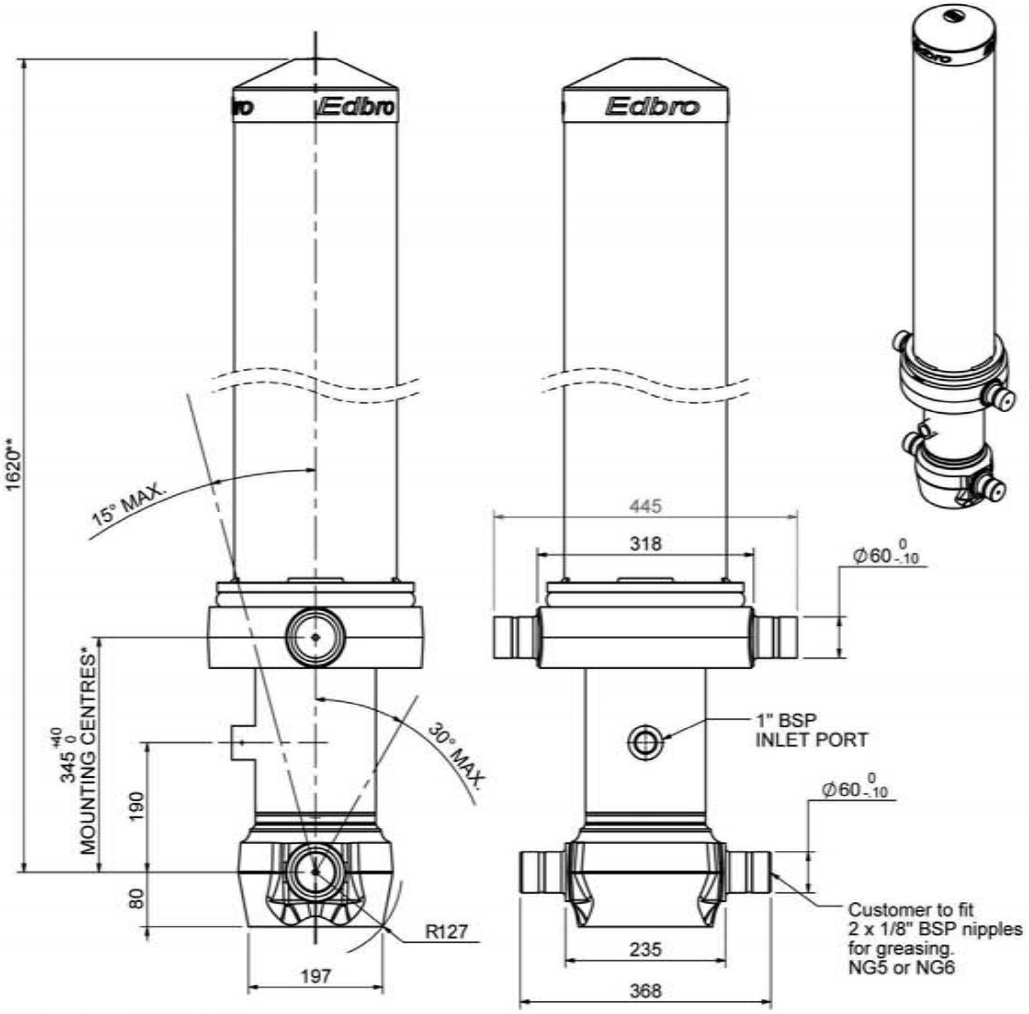


*Include 11mm Pull Out
All Stages Chrome Plated

| SPECIFICATION | | | RATED CAPACITY : 37-54 TONNES*** | |
|---|---|---|---|---|
| Stage | Diameter | Length | Stroke | Swept Volume |
| - | - | - | - | - |
| OUTER COVER | 239 | 1240 | - | - |
| 0 | 177 | 1575 | - | - |
| 1 | 155 | 1540 | 1325 | 25 |
| 2 | 136 | 1540 | 1347 | 20 |
| 3 | 117 | 1540 | 1362 | 15 |
| 4 | 98 | 1540 | 1367 | 10 |
| Final stroke reduced by | 0 | Total (+5/-10) | 5401 | 70 |
| Cylinder Mass (Kg) | 243.08 | Priming Volume | | 17.6 |
| Rated Pressure (Bar) | 175 | Total Volume (Litres) | | 87.6 |
| Maximum Pressure (Bar) | 175 | Max. first stage thrust | | 230 KN |

***TIPPING CAPACITY AT RATED PRESSURE

d = 229 ; r = 750

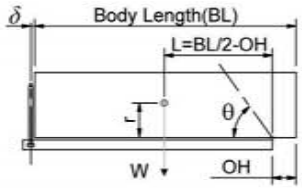


| BODY LENGTH (BL) | | | | | | OH |
|---|---|---|---|---|---|---|
| 6500 | | 7000 | | 7500 | | |
| 41 | 49° | 39 | 45° | 37 | 42° | 150 |
| 47 | 51° | 43 | 47° | 40 | 44° | 450 |
| 54 | 54° | 48 | 50° | 44 | 46° | 750 |

Tipping angle (θ)
Body + payload mass,W (tonne)

**For guidance only;**
Higher Rated Pressures may be possible. To check your application, email Edbro plc at <applications@edbro.co.uk>

NOTES

- If hydraulic pressure is used to limit overloading, the system relief valve must be set to the Rated Pressure unless agreed otherwise by Edbro
- The system relief valve can be set to Maximum Pressure if the load is limited by other means.See RATINGS page for advice
- This cylinder is for lifting purposes only and sideload conditions must be avoided
- Cylinder is painted in primer paint to RAL5013
- See bracket options page BRKT01, BRKT02
- See installation instructions INSTALL01
- Use oil according to specification OIL01

Edbro SETTING THE INDUSTRY STANDARD
Transpecs QUALITY ON THE MOVE

Technical Specifications are subject to change without notice
Date Created/Updated: 19 November 2009 13:41:08
Refer www.edbro.com to confirm latest specification
All dimensions are in 'mm', unless otherwise stated

# Cylinder 5 stage front end with Outer Cover

# NCS15OO652

**ALLOW 50mm TO REMOVE CAP FOR SERVICING

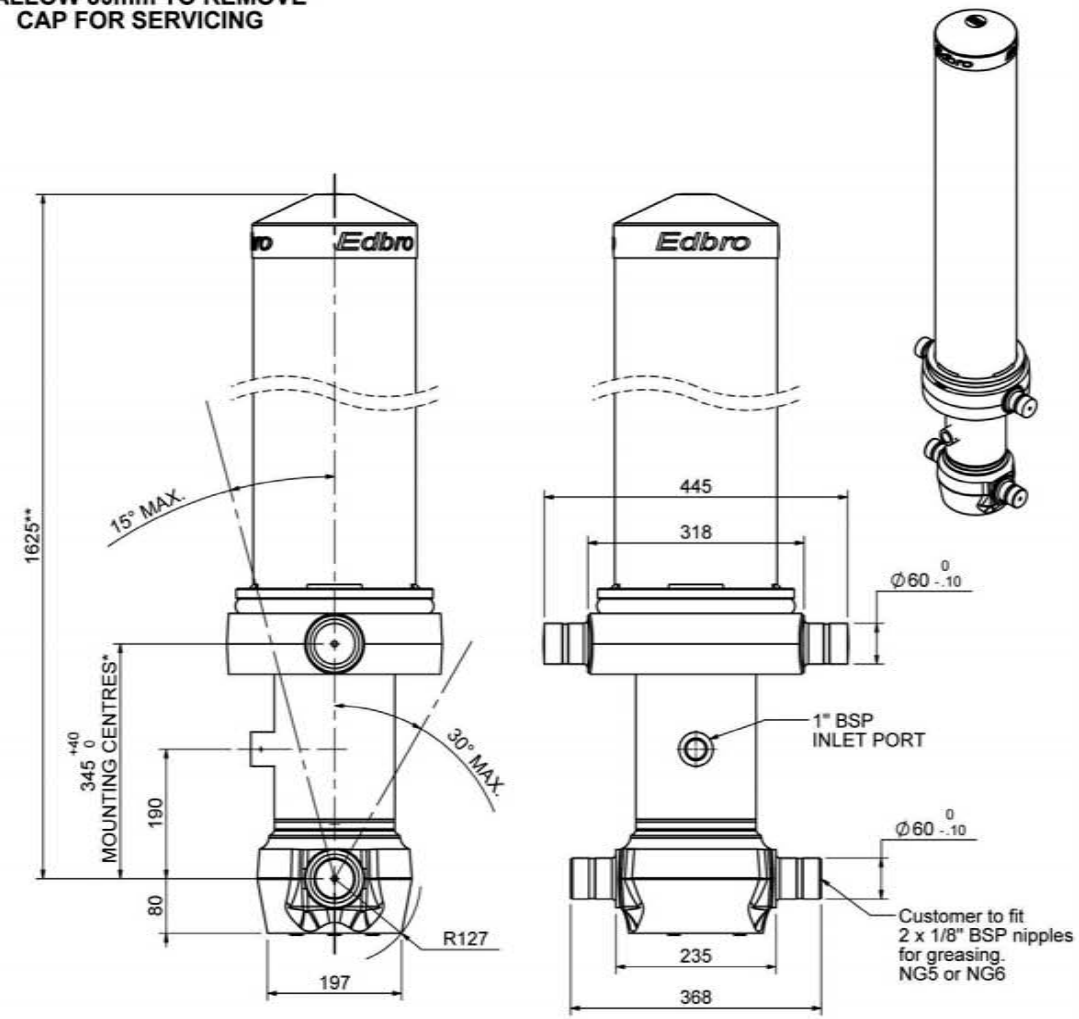


*Include 11mm Pull Out
All Stages Chrome Plated

| SPECIFICATION | | | RATED CAPACITY : 25-34 TONNES*** | |
|---|---|---|---|---|
| Stage | Diameter | Length | Stroke | Swept Volume |
| OUTER COVER | 239 | 1245 | - | - |
| 0 | 177 | 1575 | - | - |
| 1 | 155 | 1540 | 1325 | 25 |
| 2 | 136 | 1540 | 1347 | 20 |
| 3 | 117 | 1540 | 1362 | 15 |
| 4 | 98 | 1540 | 1367 | 10 |
| 5 | 79 | 1560 | 1164 | 6 |
| Final stroke reduced by | 208 | Total (+5/-10) | 6565 | 76 |
| Cylinder Mass (Kg) | 249.59 | Priming Volume | | 15.2 |
| Rated Pressure (Bar) | 175 | Total Volume (Litres) | | 91.2 |
| Maximum Pressure (Bar) | 175 | Max. first stage thrust | | 230 KN |

***TIPPING CAPACITY AT RATED PRESSURE

d = 229 ; r = 750

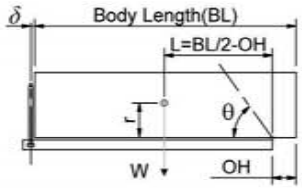


| BODY LENGTH (BL) | | | | | | OH |
|---|---|---|---|---|---|---|
| 8000 | | 8500 | | 9000 | | |
| 27 | 48° | 26 | 45° | 25 | 42° | 150 |
| 30 | 50° | 28 | 47° | 26 | 44° | 450 |
| 34 | 52° | 31 | 48° | 29 | 45° | 750 |

Tipping angle (θ)
Body + payload mass,W (tonne)

**For guidance only;**
Higher Rated Pressures may be possible. To check your application, email Edbro plc at <applications@edbro.co.uk>

NOTES

- If hydraulic pressure is used to limit overloading, the system relief valve must be set to the Rated Pressure unless agreed otherwise by Edbro
- The system relief valve can be set to Maximum Pressure if the load is limited by other means.See RATINGS page for advice
- This cylinder is for lifting purposes only and sideload conditions must be avoided
- Cylinder is painted in primer paint to RAL5013
- See bracket options page BRKT01, BRKT02
- See installation instructions INSTALL01
- Use oil according to specification OIL01

Edbro SETTING THE INDUSTRY STANDARD
Transpecs QUALITY ON THE MOVE

Technical Specifications are subject to change without notice
Date Created/Updated: 19 November 2009 15:55:44
Refer www.edbro.com to confirm latest specification
All dimensions are in 'mm', unless otherwise stated

# Cylinder 5 stage front end with Outer Cover

# NCS17OO673

****ALLOW 50mm TO REMOVE CAP FOR SERVICING**

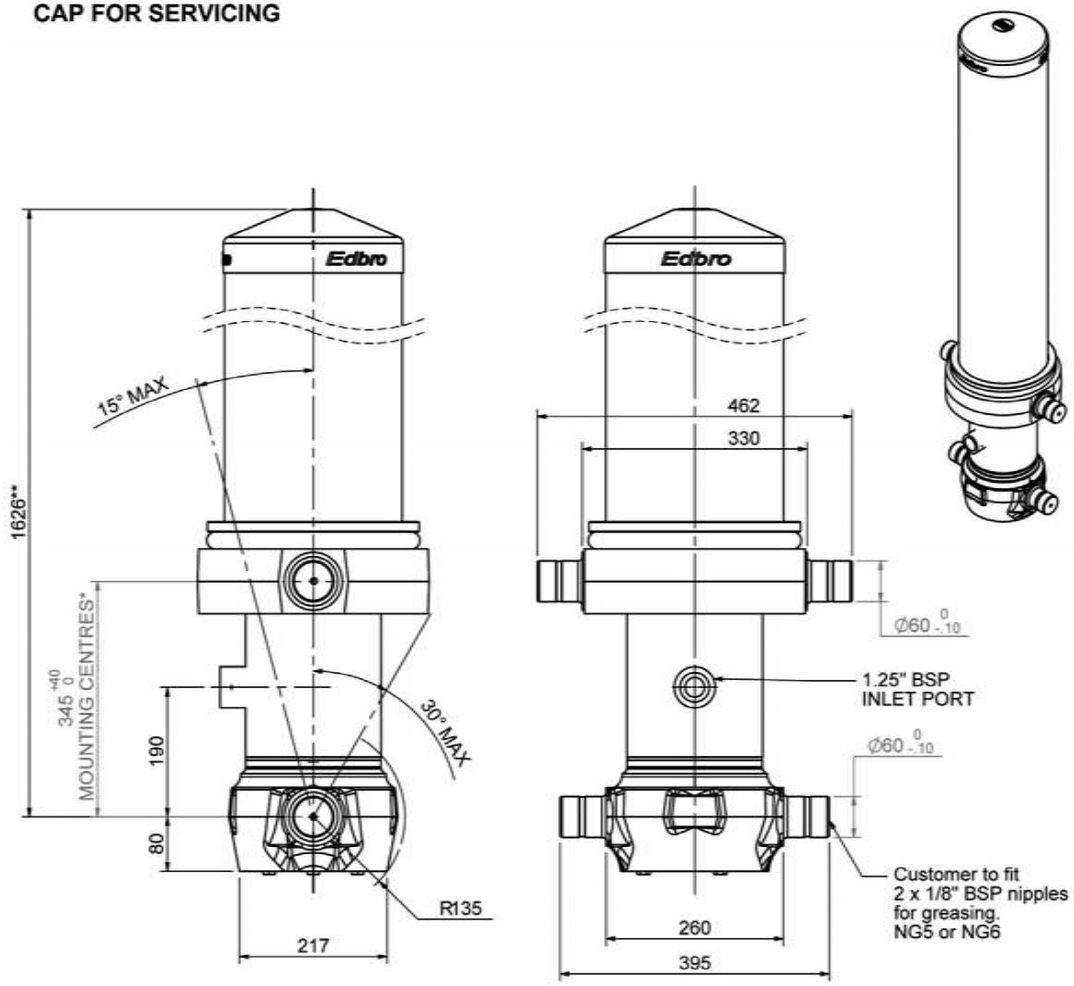


***Includes 12mm Pull Out**
**All Stages Chrome Plated**

| SPECIFICATION | | | RATED CAPACITY : 37-51 TONNES*** | |
|---|---|---|---|---|
| Stage | Diameter | Length | Stroke | Swept Volume |
| OUTER COVER | 261 | 1245 | - | - |
| 0 | 199 | 1575 | - | - |
| 1 | 176 | 1540 | 1314 | 32 |
| 2 | 155 | 1540 | 1337 | 25 |
| 3 | 136 | 1540 | 1347 | 20 |
| 4 | 117 | 1540 | 1362 | 15 |
| 5 | 98 | 1540 | 1367 | 10 |
| Final stroke reduced by | 0 | Total (+5/-10) | 6727 | 102 |
| Cylinder Mass (Kg) | 312.23 | Priming Volume | | 21 |
| Rated Pressure (Bar) | 175 | Total Volume (Litres) | | 123 |
| Maximum Pressure (Bar) | 175 | Max. first stage thrust | | 260 KN |

*****TIPPING CAPACITY AT RATED PRESSURE**

d = 229 ; r = 900

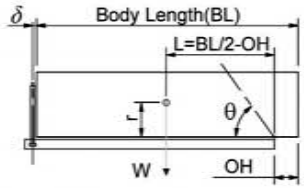


| BODY LENGTH (BL) | | | | | | OH |
|---|---|---|---|---|---|---|
| 8250 | | 8750 | | 9250 | | |
| 41 | 48° | 39 | 45° | 37 | 42° | 150 |
| 45 | 50° | 42 | 47° | 40 | 44° | 450 |
| 51 | 52° | 46 | 49° | 43 | 46° | 750 |

Tipping angle (θ)
Body + payload mass,W (tonne)

**For guidance only;**
Higher Rated Pressures may be possible. To check your application, email Edbro plc at <applications@edbro.co.uk>

## NOTES

- If hydraulic pressure is used to limit overloading, the system relief valve must be set to the Rated Pressure unless agreed otherwise by Edbro
- The system relief valve can be set to Maximum Pressure if the load is limited by other means.See RATINGS page for advice
- This cylinder is for lifting purposes only and sideload conditions must be avoided
- Cylinder is painted in primer paint to RAL5013
- See bracket options page BRKT01, BRKT02
- See installation instructions INSTALL01
- Use oil according to specification OIL01

Edbro SETTING THE INDUSTRY STANDARD
Transpecs QUALITY ON THE MOVE

Technical Specifications are subject to change without notice
Date Created/Updated: 21 August 2009 16:02:09
Refer www.edbro.com to confirm latest specification
All dimensions are in 'mm', unless otherwise stated